SPECIFICATION SHEET

COLLECTION: ASTRA
PRODUCT CODE: AX-AST-106-CP

TAP TYPE
Pillar Tap

PLUMBING SYSTEM SUITABILITY
Gravity System, Pumped System, Combination Boiler, Pressurised System

MOUNTING
Deck Mounted

HOLES
2 Hole

DECK HOLE DRILL DIAMETER
22mm

HANDLES
2 Handle

WITH WATER FLOW STRAIGHTENER
Yes

COLLECTION NAME
Astra

FINISH
Chrome

tel: 01934 744466
email: sales@vado.com
www.vado.com

WHERE INSPIRATION FLOWS
TAPS | SHOWERS | ACCESSORIES

VADO

SPECIFICATION SHEET

COLLECTION: ASTRA
PRODUCT CODE: AX-AST-106-CP

RECOMMENDED FLOW REGULATOR

FR-106/4-PLA (2 are required)

MINIMUM OPERATING PRESSURE

0.2 Bar LP

GUARANTEE

10 Year Guarantee

tel: 01934 744466
email: sales@vado.com
www.vado.com

WHERE INSPIRATION FLOWS
TAPS | SHOWERS | ACCESSORIES
VADO

TECHNICAL DRAWING

COLLECTION: ASTRA
PRODUCT CODE: AX-AST-106-CP

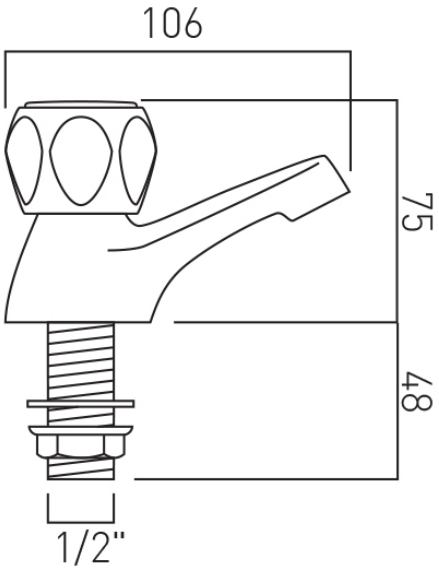

tel: 01934 744466
email: sales@vado.com
www.vado.com

WHERE INSPIRATION FLOWS
TAPS | SHOWERS | ACCESSORIES

VADO