SPECIFICATION SHEET

COLLECTION: VECTA
PRODUCT CODE: AX-VEC-130/CD+K-CP



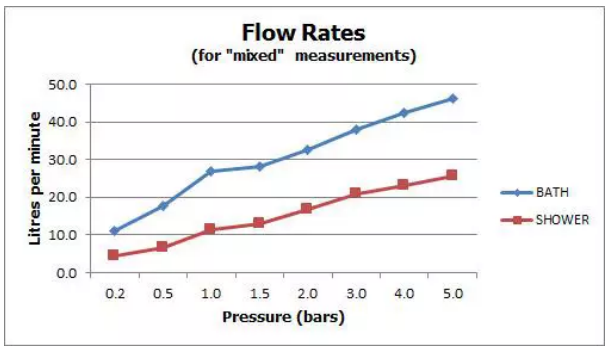

The flow rate displayed is calculated using ideal system conditions. This result should only be taken as an indication as the flow rate may vary depending on the specific in-situ configuration.

PLUMBING SYSTEM SUITABILITY
Gravity System, Pumped System, Combination Boiler, Pressurised System

HANDLES
2 Handle

MOUNTING
Deck Mounted

WITH INTEGRATED DIVERTER
No

WITH EASY-FIT BRACKETS
No

WITH SHOWER KIT
Yes

WITH THERMOSTATIC TECHNOLOGY
No

FOR USE WITH BATH FILLER WASTE AND OVERFLOW
No

MINIMUM OPERATING PRESSURE
0.2 Bar LP

tel: 01934 744466
email: sales@vado.com
www.vado.com

WHERE INSPIRATION FLOWS

TAPS | SHOWERS | FURNITURE

VADO

SPECIFICATION SHEET

COLLECTION: VECTA
PRODUCT CODE: AX-VEC-130/CD+K-CP

MAXIMUM OPERATING PRESSURE

5.0 Bar HP

RECOMMENDED FLOW REGULATOR

FR-SHOWER/9-C/P

WITH BATH SPOUT

No

WITH AIR-INJECTION TECHNOLOGY

No

WITH WATER FLOW STRAIGHTENER

Yes

WITH WATER FLOW AERATOR

No

CONNECTIONS / FITTINGS

2 x 3/4" male threaded connections

DECK HOLE DRILL DIAMETER

27mm

SPARE PARTS

Cold Ceramic cartridge C-201-RTC Hot Ceramic cartridge C-201-LTC Standard cartridge C-102-STD

FINISH

Chrome

COLLECTION NAME

Vecta

GUARANTEE

10 Year Guarantee

tel: 01934 744466
email: sales@vado.com
www.vado.com

WHERE INSPIRATION FLOWS
TAPS | SHOWERS | FURNITURE

VADO

TECHNICAL DRAWING

COLLECTION: VECTA
PRODUCT CODE: AX-VEC-130/CD+K-CP

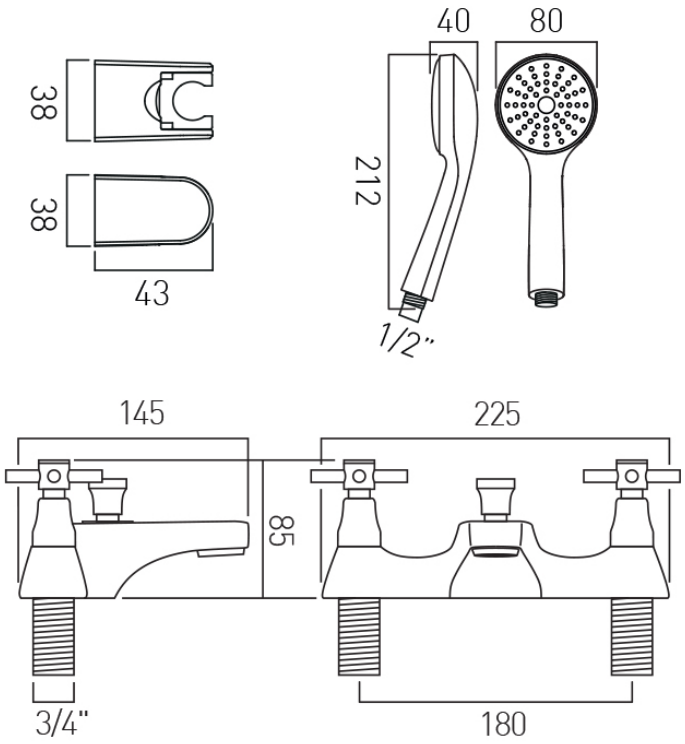

tel: 01934 744466
email: sales@vado.com
www.vado.com

WHERE INSPIRATION FLOWS
TAPS | SHOWERS | FURNITURE

VADO