SPECIFICATION SHEET

COLLECTION: IRLO
PRODUCT CODE: AX-IRO-100M/CC-CP



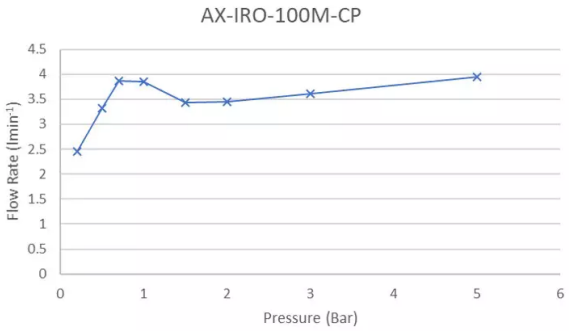

The flow rate displayed is calculated using ideal system conditions. This result should only be taken as an indication as the flow rate may vary depending on the specific in-situ configuration.

TAP TYPE
Cloakroom Taps

FINISH
Chrome

COLLECTION NAME
Irlo

GUARANTEE
10 Year Guarantee

PLUMBING SYSTEM SUITABILITY
Gravity System, Pumped System, Combination Boiler, Pressurised System

MINIMUM OPERATING PRESSURE
0.5 Bar LP

MAXIMUM OPERATING PRESSURE
5.0 Bar HP

HANDLES
Single Lever

MOUNTING
Deck Mounted

tel: 01934 744466
email: sales@vado.com
www.vado.com

WHERE INSPIRATION FLOWS
TAPS | SHOWERS | FURNITURE

VADO

SPECIFICATION SHEET

COLLECTION: IRLO
PRODUCT CODE: AX-IRO-100M/CC-CP

WASTE
With Universal Basin Waste

RECOMMENDED FLOW REGULATOR
4.5 l/m dual core flow regulator fitted as standard

WITH ECOTURN COLD START TECHNOLOGY
No

WITH WATER FLOW STRAIGHTENER
No

WITH WATER FLOW AERATOR
Yes

CONNECTIONS / FITTINGS
2 x 1/2" nut x 400mm flexipipe connections

DECK HOLE DRILL DIAMETER
35mm

SPARE PARTS
Ceramic Cartridge ION-100M-CAR

tel: 01934 744466
email: sales@vado.com
www.vado.com

WHERE INSPIRATION FLOWS
TAPS | SHOWERS | FURNITURE

VADO

TECHNICAL DRAWING

COLLECTION: IRLO
PRODUCT CODE: AX-IRO-100M/CC-CP

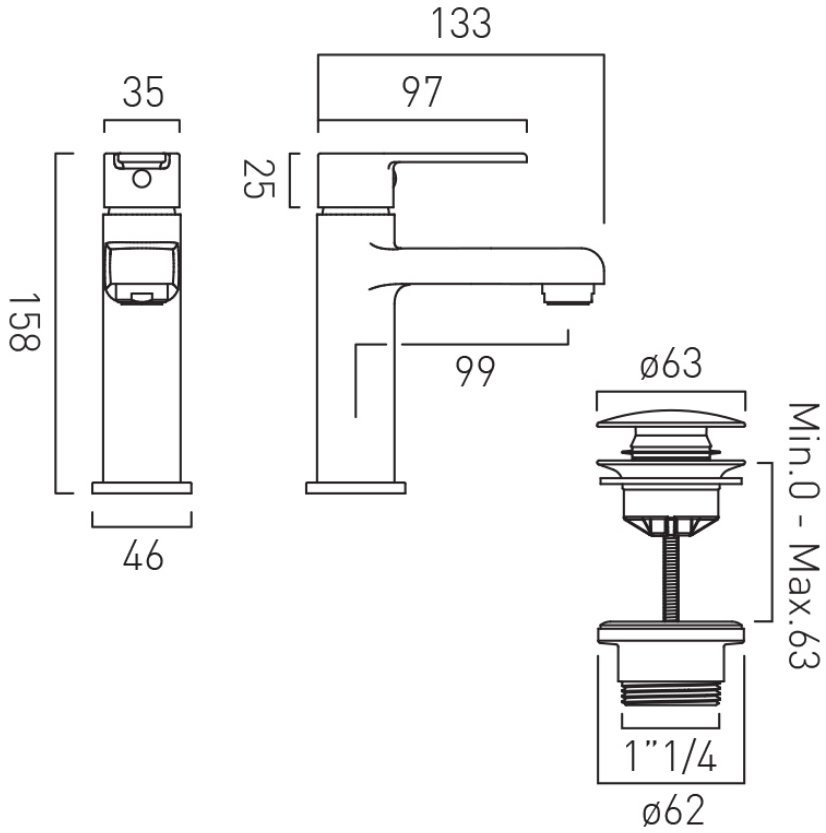

tel: 01934 744466
email: sales@vado.com
www.vado.com

WHERE INSPIRATION FLOWS
TAPS | SHOWERS | FURNITURE