SPECIFICATION SHEET

COLLECTION: SHOWERING SOLUTIONS
PRODUCT CODE: IND-SFSRK/RO-ATM-BLK



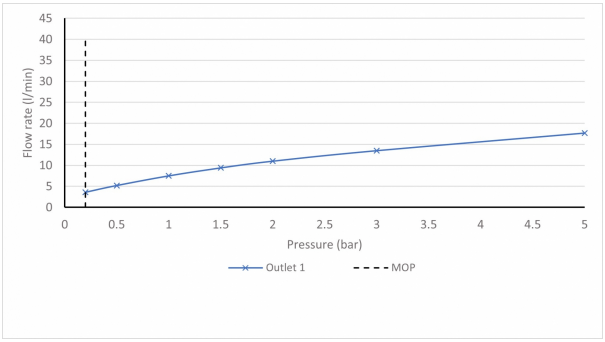

The flow rate displayed is calculated using ideal system conditions. This result should only be taken as an indication as the flow rate may vary depending on the specific in-situ configuration.

SHOWER TYPE
Slide Rail Shower Kit

SELF-CLEANING
No

SLIDE RAIL LENGTH
805mm slide rail with twist control 900mm overall rail length

WITH CROSS-SPRAY TECHNOLOGY
No

ADJUSTABLE FIXING FOR EASY RETRO FIT
No

WITH TWIST CONTROL
No

WITH PUSH BUTTON CONTROL
No

WITH HOSE RETAINER
No

RUB-CLEAN NOZZLES
Yes

tel: 01934 744466
email: sales@vado.com
www.vado.com

WHERE INSPIRATION FLOWS

TAPS | SHOWERS | FURNITURE

VADO

SPECIFICATION SHEET

COLLECTION: SHOWERING SOLUTIONS
PRODUCT CODE: IND-SFSRK/RO-ATM-BLK

FUNCTIONS

1

WITH AIR-INJECTION TECHNOLOGY

Yes

HOSE

with 150cm smooth hose

MOUNTING

Wall Mounted

PLUMBING SYSTEM SUITABILITY

Gravity System, Pumped System, Combination Boiler, Pressurised System

COLLECTION NAME

Showering Solutions

FINISH

Brushed Black

MINIMUM OPERATING PRESSURE

0.2 Bar LP

MAXIMUM OPERATING PRESSURE

5.0 Bar HP

GUARANTEE

15 Year Guarantee

tel: 01934 744466
email: sales@vado.com
www.vado.com

TECHNICAL DRAWING

COLLECTION: SHOWERING SOLUTIONS
PRODUCT CODE: IND-SFSRK/RO-ATM-BLK

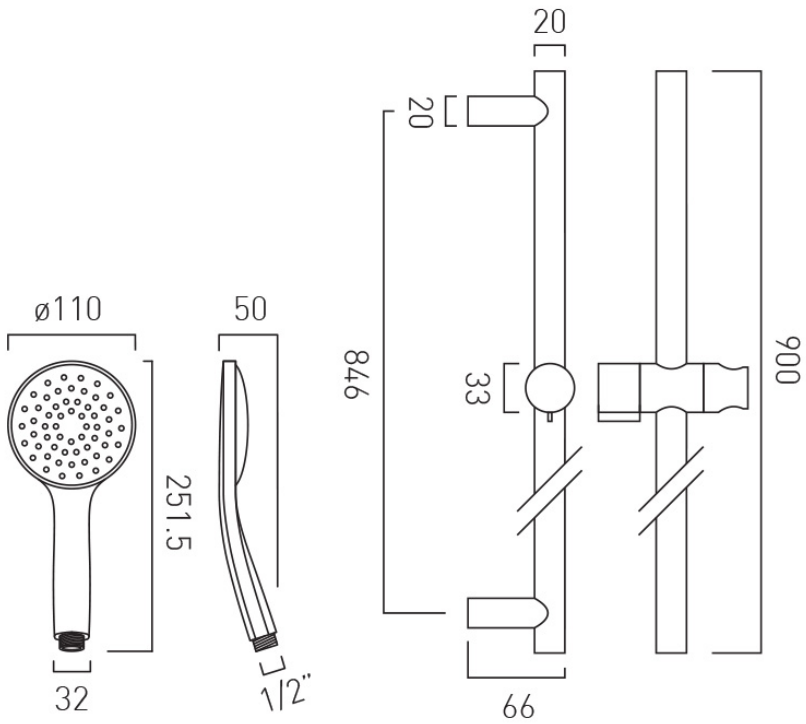

tel: 01934 744466
email: sales@vado.com
www.vado.com

WHERE INSPIRATION FLOWS
TAPS | SHOWERS | FURNITURE

VADO