SPECIFICATION SHEET

COLLECTION: KNURLED ACCENTS
PRODUCT CODE: IND-T128/3-H-BRNK



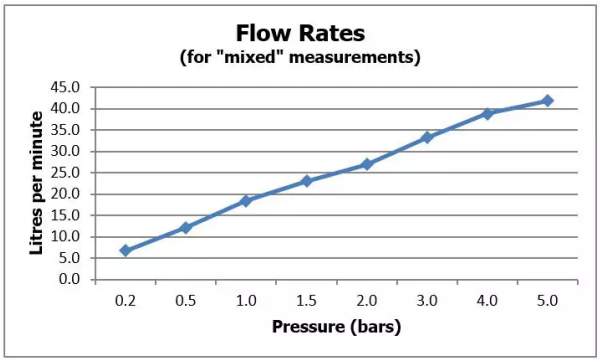

The flow rate displayed is calculated using ideal system conditions. This result should only be taken as an indication as the flow rate may vary depending on the specific in-situ configuration.

SHOWER TYPE
Shower Valve

VALVE TYPE
Concealed

ORIENTATION
Horizontal

NUMBER OF OUTLETS
3 Outlet

WITH ALL-FLOW FUNCTION
Yes

WITH INTEGRATED DIVERTER
No

COMPATIBLE WITH STUDFAST
Yes

WITH BLEED VALVE FOR SYSTEM FLUSH ON INSTALLATION
No

WITH SHOWER KIT
No

tel: 01934 744466
email: sales@vado.com
www.vado.com

WHERE INSPIRATION FLOWS
TAPS | SHOWERS | FURNITURE

SPECIFICATION SHEET

COLLECTION: KNURLED ACCENTS
PRODUCT CODE: IND-T128/3-H-BRNK

INCLUDES MORTAR / TILE GUARD

Yes

COMPATIBLE WITH EASY-FIX BRACKETS

No

WITH THERMOSTATIC TECHNOLOGY

Yes

INSTALLATION TOLERANCES

min-max wall mount 75-100mm optimum installation depth 87mm

CONNECTIONS / FITTINGS

2 x 3/4" female inlets / 3 x 3/4" female outlets

SPARE PARTS

thermostatic cartridge V-704-34S diverter cartridge FL-802-33/2MX flow cartridge FL-301-RTC

MOUNTING

Wall Mounted

PLUMBING SYSTEM SUITABILITY

Gravity System, Pumped System, Combination Boiler, Pressurised System

COLLECTION NAME

Knurled Accents

FINISH

Brushed Nickel

MINIMUM OPERATING PRESSURE

0.2 Bar LP (Shower) / 1.0 Bar MP (Bath)

MAXIMUM OPERATING PRESSURE

5.0 Bar HP

tel: 01934 744466
email: sales@vado.com
www.vado.com

SPECIFICATION SHEET

COLLECTION: KNURLED ACCENTS
PRODUCT CODE: IND-T128/3-H-BRNK

GUARANTEE

15 Year Guarantee

tel: 01934 744466
email: sales@vado.com
www.vado.com

WHERE INSPIRATION FLOWS

TAPS | SHOWERS | FURNITURE

VADO

TECHNICAL DRAWING

COLLECTION: KNURLED ACCENTS
PRODUCT CODE: IND-T128/3-H-BRNK

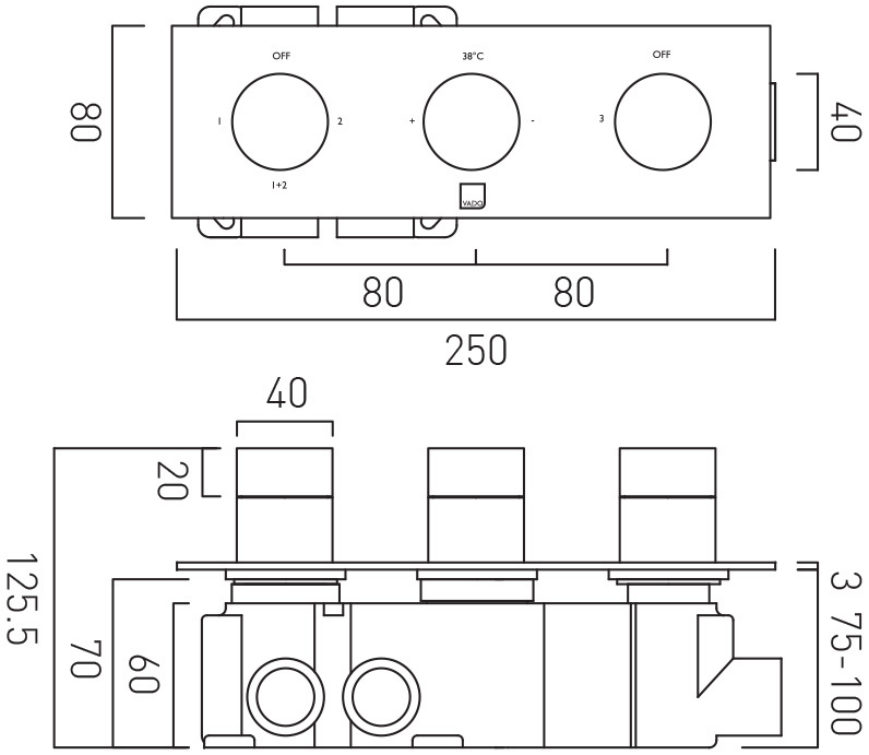

tel: 01934 744466
email: sales@vado.com
www.vado.com

WHERE INSPIRATION FLOWS
TAPS | SHOWERS | FURNITURE

VADO