SPECIFICATION SHEET

COLLECTION: ELEMENTS
PRODUCT CODE: IND-ELW101F-BRG



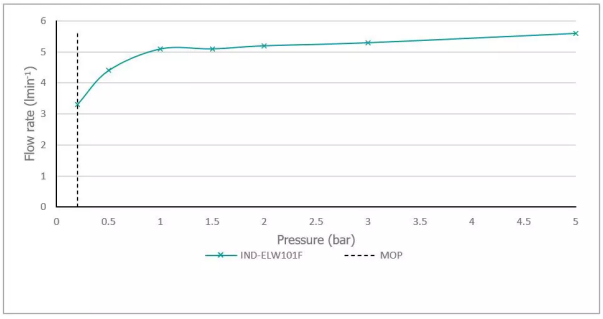

The flow rate displayed is calculated using ideal system conditions. This result should only be taken as an indication as the flow rate may vary depending on the specific in-situ configuration.

TAP TYPE
Basin Mixer Taps

FINISH
Brushed Gold

COLLECTION NAME
Elements

GUARANTEE
15 Year Guarantee

PLUMBING SYSTEM SUITABILITY
Gravity System, Pumped System, Combination Boiler, Pressurised System

MINIMUM OPERATING PRESSURE
0.2 Bar LP

MAXIMUM OPERATING PRESSURE
5.0 Bar HP

MOUNTING
Deck Mounted

WASTE
With Pop-up Waste

tel: 01934 744466
email: sales@vado.com
www.vado.com

WHERE INSPIRATION FLOWS

TAPS | SHOWERS | FURNITURE

VADO

SPECIFICATION SHEET

COLLECTION: ELEMENTS
PRODUCT CODE: IND-ELW101F-BRG

RECOMMENDED FLOW REGULATOR

5 l/m flow regulator fitted as standard

WITH ECOTURN COLD START TECHNOLOGY

No

WITH WATER FLOW STRAIGHTENER

No

WITH WATER FLOW AERATOR

Yes

CONNECTIONS / FITTINGS

2 x 1/2" 600mm flexipipe connections

DECK HOLE DRILL DIAMETER

Valve: 27mm Spout: 30mm

SPARE PARTS

cold ceramic cartridge C-206-RTC hot ceramic cartridge C-206-LTC

tel: 01934 744466
email: sales@vado.com
www.vado.com

WHERE INSPIRATION FLOWS
TAPS | SHOWERS | FURNITURE

VADO

TECHNICAL DRAWING

COLLECTION: ELEMENTS
PRODUCT CODE: IND-ELW101F-BRG

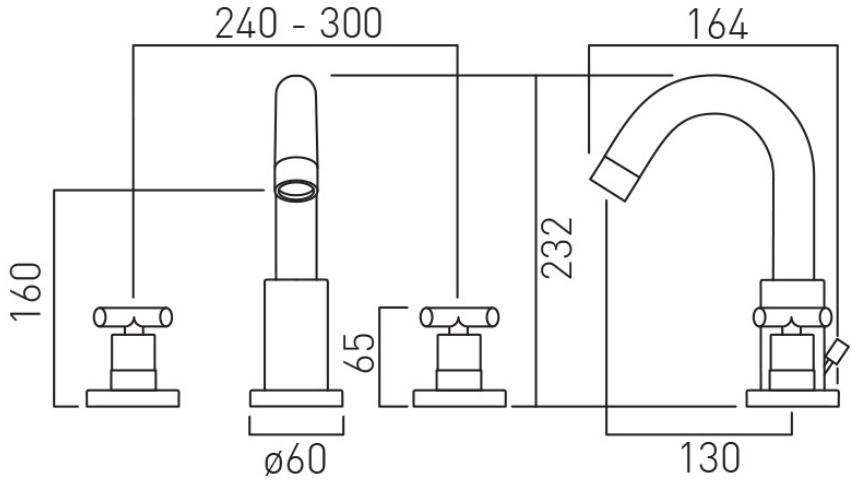

tel: 01934 744466
email: sales@vado.com
www.vado.com

WHERE INSPIRATION FLOWS
TAPS | SHOWERS | FURNITURE

VADO