SPECIFICATION SHEET

COLLECTION: KNURLED ACCENTS
PRODUCT CODE: IND-ORI237-BLKK



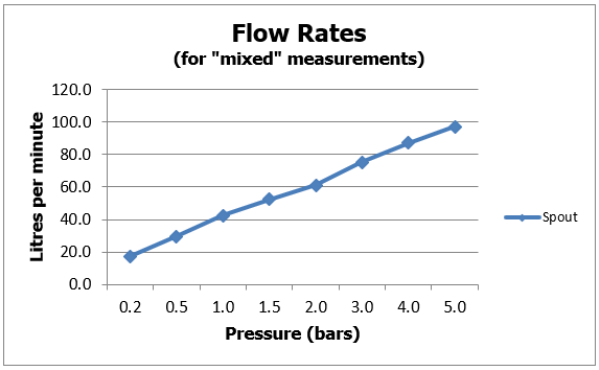

The flow rate displayed is calculated using ideal system conditions. This result should only be taken as an indication as the flow rate may vary depending on the specific in-situ configuration.

TAP TYPE
Bath Fillers

PLUMBING SYSTEM SUITABILITY
Gravity System, Pumped System, Combination Boiler, Pressurised System

MOUNTING
Deck Mounted

WITH WATER FLOW STRAIGHTENER
No

CONNECTIONS / FITTINGS
2 x 3/4" 48mm fitted tails

DECK HOLE DRILL DIAMETER
2 x 28-30mm

MINIMUM OPERATING PRESSURE
0.2 Bar LP

MAXIMUM OPERATING PRESSURE
5.0 Bar HP

SPARE PARTS
cold ceramic cartridge C-302-RTC hot ceramic cartridge C-302-LTC

tel: 01934 744466
email: sales@vado.com
www.vado.com

WHERE INSPIRATION FLOWS
TAPS | SHOWERS | FURNITURE

SPECIFICATION SHEET

COLLECTION: KNURLED ACCENTS
PRODUCT CODE: IND-ORI237-BLKK

STYLE

Knurled

FINISH

Brushed Black

COLLECTION NAME

Knurled Accents

GUARANTEE

15 Year Guarantee

tel: 01934 744466
email: sales@vado.com
www.vado.com

WHERE INSPIRATION FLOWS

TAPS | SHOWERS | FURNITURE

VADO

TECHNICAL DRAWING

COLLECTION: KNURLED ACCENTS
PRODUCT CODE: IND-ORI237-BLKK

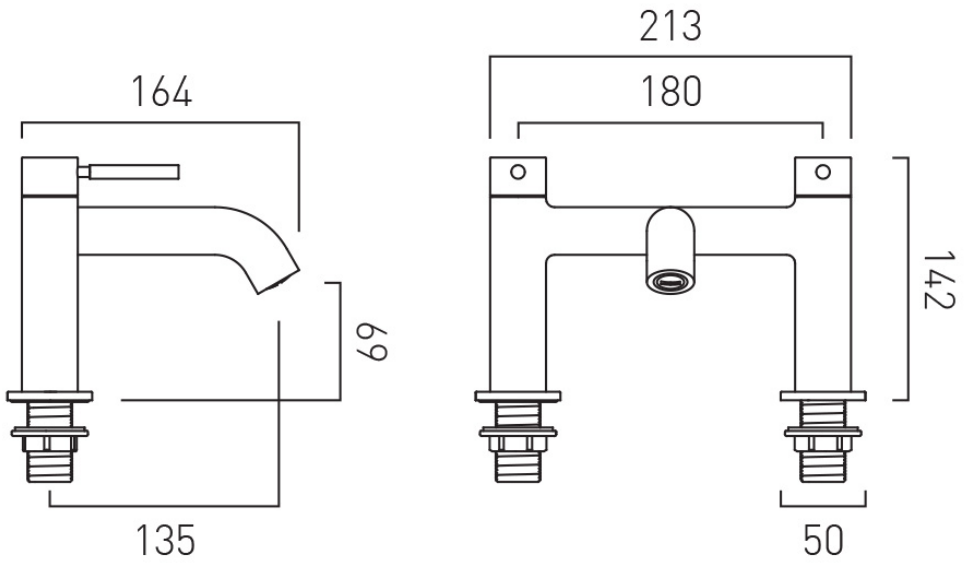

tel: 01934 744466
email: sales@vado.com
www.vado.com

WHERE INSPIRATION FLOWS
TAPS | SHOWERS | FURNITURE

VADO