SPECIFICATION SHEET

COLLECTION: TABLET ARRONDI
PRODUCT CODE: TAB-128/3WO-B-ARR-CP



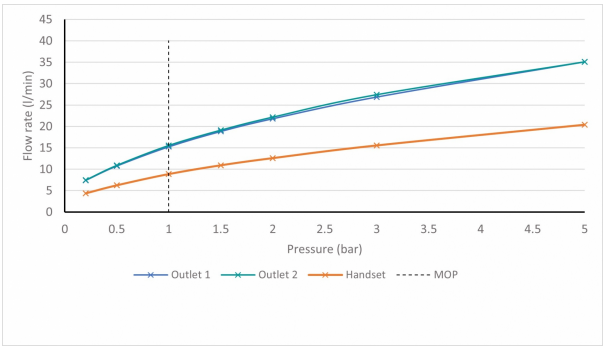

The flow rate displayed is calculated using ideal system conditions. This result should only be taken as an indication as the flow rate may vary depending on the specific in-situ configuration.

SHOWER TYPE
Shower Valve

STYLE
Round, Traditional, Contemporary

NUMBER OF OUTLETS
3 Outlet

WITH ALL-FLOW FUNCTION
Yes

WITH INTEGRATED DIVERTER
No

COMPATIBLE WITH STUDFAST
No

WITH BLEED VALVE FOR SYSTEM FLUSH ON INSTALLATION
No

WITH SHOWER KIT
Yes

INCLUDES MORTAR / TILE GUARD
Yes

tel: 01934 744466
email: sales@vado.com
www.vado.com

WHERE INSPIRATION FLOWS

TAPS | SHOWERS | FURNITURE

VADO

SPECIFICATION SHEET

COLLECTION: TABLET ARRONDI
PRODUCT CODE: TAB-128/3WO-B-ARR-CP

COMPATIBLE WITH EASY-FIX BRACKETS
No

WITH THERMOSTATIC TECHNOLOGY
Yes

INSTALLATION TOLERANCES
min-max wall mount 79.5-101.5mm

CONNECTIONS / FITTINGS
2 x 3/4" female inlets 2 x 3/4" female outlets

SPARE PARTS
thermostatic cartridge C-704-34S diverter cartridge FL-801-33/2SX flow cartridge FL-301-RTC

MOUNTING
Wall Mounted

PLUMBING SYSTEM SUITABILITY
Pumped System, Combination Boiler, Pressurised System

COLLECTION NAME
Tablet Arrondi

FINISH
Chrome

MINIMUM OPERATING PRESSURE
1.0 Bar MP

MAXIMUM OPERATING PRESSURE
5.0 Bar HP

GUARANTEE
15 Year Guarantee

tel: 01934 744466
email: sales@vado.com
www.vado.com

WHERE INSPIRATION FLOWS
TAPS | SHOWERS | FURNITURE
VADO

TECHNICAL DRAWING

COLLECTION: TABLET ARRONDI
PRODUCT CODE: TAB-128/3WO-B-ARR-CP

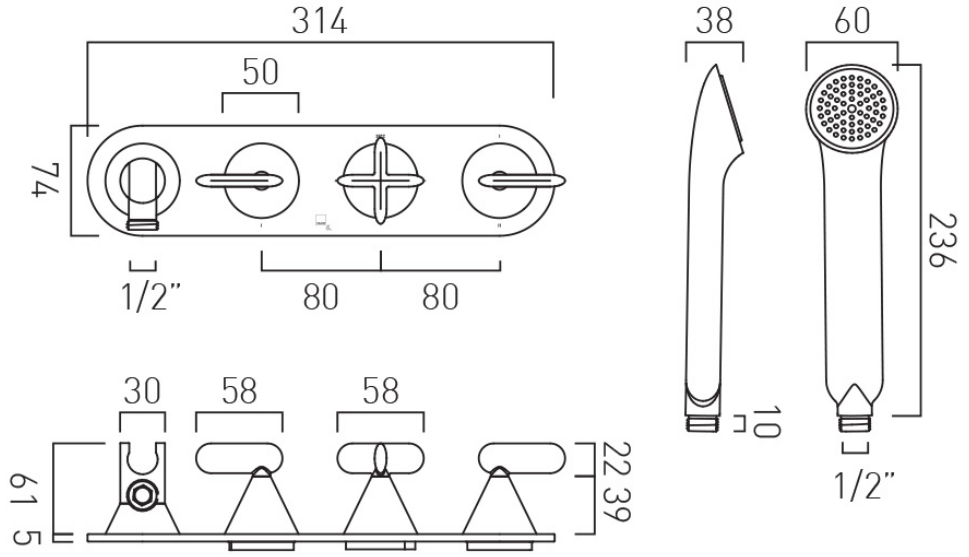

tel: 01934 744466
email: sales@vado.com
www.vado.com

WHERE INSPIRATION FLOWS
TAPS | SHOWERS | FURNITURE

VADO