SPECIFICATION SHEET

COLLECTION: TABLET ARRONDI
PRODUCT CODE: TAB-223T/WO-ARR-CP



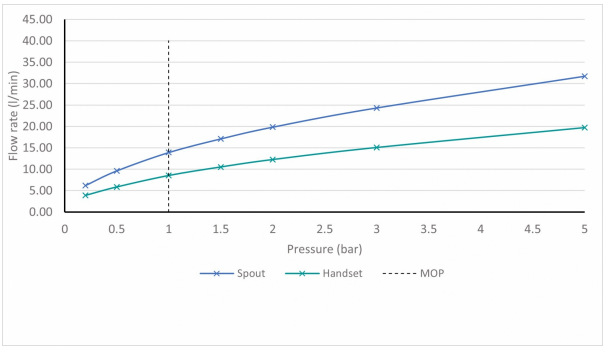

The flow rate displayed is calculated using ideal system conditions. This result should only be taken as an indication as the flow rate may vary depending on the specific in-situ configuration.

TAP TYPE
Bath Shower Mixers

PLUMBING SYSTEM SUITABILITY
Pumped System, Combination Boiler, Pressurised System

MOUNTING
Wall Mounted

WITH INTEGRATED DIVERTER
No

WITH EASY-FIT BRACKETS
No

WITH SHOWER KIT
Yes

WITH THERMOSTATIC TECHNOLOGY
Yes

FOR USE WITH BATH FILLER WASTE AND OVERFLOW
No

MINIMUM OPERATING PRESSURE
1.0 Bar MP

tel: 01934 744466
email: sales@vado.com
www.vado.com

WHERE INSPIRATION FLOWS

TAPS | SHOWERS | FURNITURE

VADO

SPECIFICATION SHEET

COLLECTION: TABLET ARRONDI
PRODUCT CODE: TAB-223T/WO-ARR-CP

MAXIMUM OPERATING PRESSURE

5.0 Bar HP

RECOMMENDED FLOW REGULATOR

FR-FLEXI/9-PLA

WITH BATH SPOUT

No

WITH AIR-INJECTION TECHNOLOGY

No

WITH WATER FLOW STRAIGHTENER

Yes

WITH WATER FLOW AERATOR

No

INSTALLATION TOLERANCES

min-max wall mount 79.5-101.5mm

CONNECTIONS / FITTINGS

2 x 3/4" female inlets includes 3/4" - 1/2" adaptors

SPARE PARTS

thermostatic cartridge V-704-34S diverter cartridge FL-801-33/2SX

STYLE

Round, Traditional, Contemporary, Cross Handles

NOTES

supplied with mortar/tile guard

FINISH

Chrome

tel: 01934 744466
email: sales@vado.com
www.vado.com

SPECIFICATION SHEET

COLLECTION: TABLET ARRONDI
PRODUCT CODE: TAB-223T/WO-ARR-CP

COLLECTION NAME

Tablet Arrondi

GUARANTEE

15 Year Guarantee

tel: 01934 744466
email: sales@vado.com
www.vado.com

WHERE INSPIRATION FLOWS

TAPS | SHOWERS | FURNITURE

VADO

TECHNICAL DRAWING

COLLECTION: TABLET ARRONDI
PRODUCT CODE: TAB-223T/WO-ARR-CP

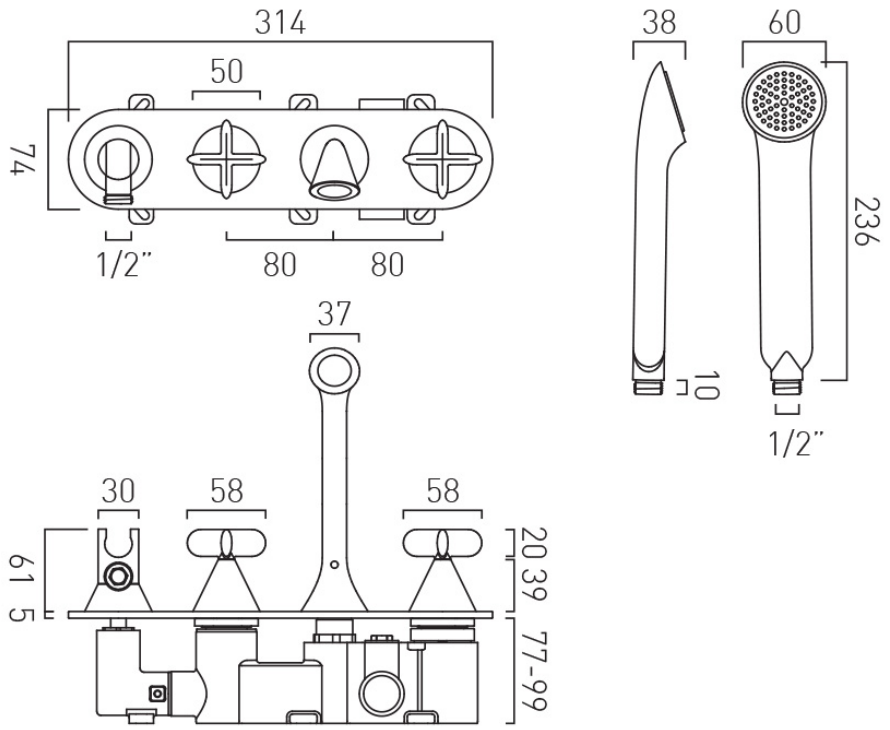

tel: 01934 744466
email: sales@vado.com
www.vado.com

WHERE INSPIRATION FLOWS

TAPS | SHOWERS | FURNITURE

VADO