SPECIFICATION SHEET

COLLECTION: SKY
PRODUCT CODE: SKY-R038-CP

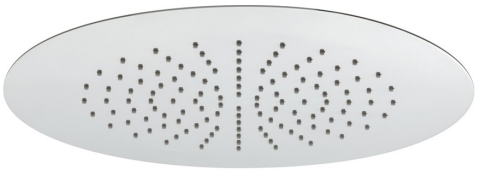

PLUMBING SYSTEM SUITABILITY
Pumped System, Combination Boiler, Pressurised System

MOUNTING
Ceiling Mounted

WITH AIR-INJECTION TECHNOLOGY
No

FUNCTIONS
1

RUB-CLEAN NOZZLES
Yes

SELF-CLEANING
No

SHOWER HEAD SIZE
380mm (15") diameter

COLLECTION NAME
Sky

FINISH
Chrome

tel: 01934 744466
email: sales@vado.com
www.vado.com

WHERE INSPIRATION FLOWS
TAPS | SHOWERS | ACCESSORIES

VADO

SPECIFICATION SHEET

COLLECTION: SKY
PRODUCT CODE: SKY-R038-CP

MINIMUM OPERATING PRESSURE

1.0 Bar MP

GUARANTEE

15 Year Guarantee

tel: 01934 744466
email: sales@vado.com
www.vado.com

WHERE INSPIRATION FLOWS

TAPS | SHOWERS | ACCESSORIES

VADO

TECHNICAL DRAWING

COLLECTION: SKY
PRODUCT CODE: SKY-R038-CP

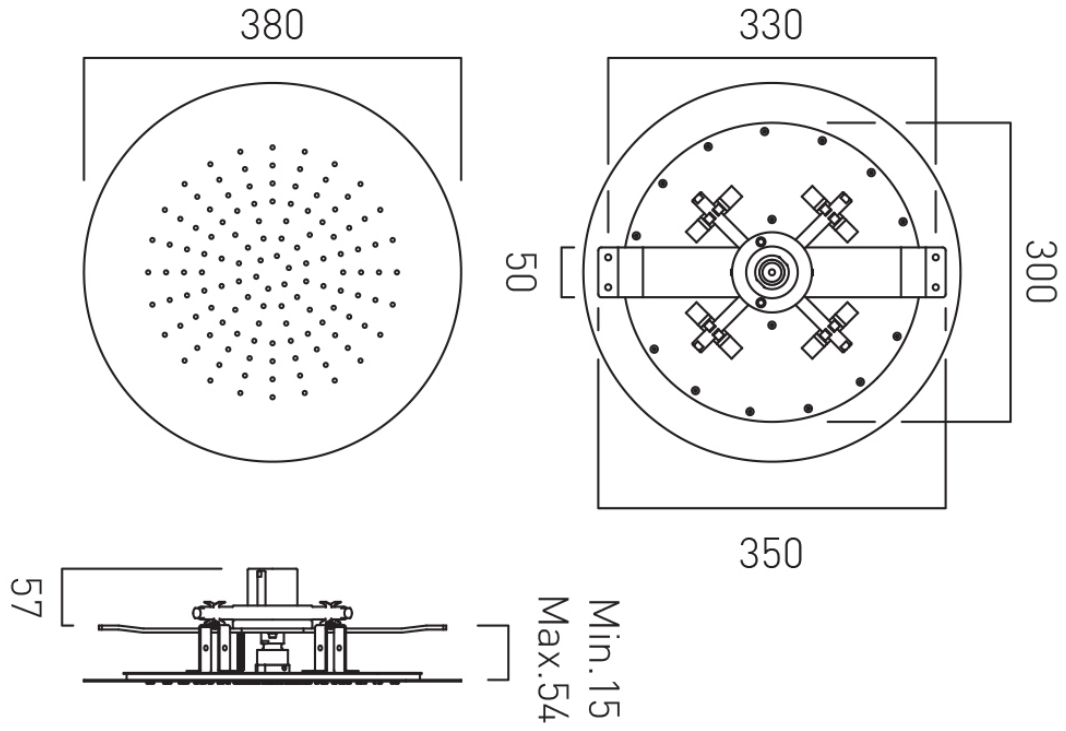

tel: 01934 744466
email: sales@vado.com
www.vado.com

WHERE INSPIRATION FLOWS
TAPS | SHOWERS | ACCESSORIES

VADO