SPECIFICATION SHEET

COLLECTION: AQUABLADE
PRODUCT CODE: AQB-RO/20/SA-C/P



PLUMBING SYSTEM SUITABILITY

Gravity System, Pumped System, Combination Boiler, Pressurised System

MOUNTING

Wall Mounted

WITH AIR-INJECTION TECHNOLOGY

No

FUNCTIONS

1

RUB-CLEAN NOZZLES

Yes

SELF-CLEANING

No

WITH SHOWER ARM

1

SHOWER HEAD SIZE

200mm (8") diameter

COLLECTION NAME

Aquablade

tel: 01934 744466
email: sales@vado.com
www.vado.com

WHERE INSPIRATION FLOWS

TAPS | SHOWERS | FURNITURE

VADO

SPECIFICATION SHEET

COLLECTION: AQUABLADE
PRODUCT CODE: AQB-RO/20/SA-C/P

FINISH

Chrome

MINIMUM OPERATING PRESSURE

0.2 Bar LP

MAXIMUM OPERATING PRESSURE

5.0 Bar HP

GUARANTEE

15 Year Guarantee

tel: 01934 744466
email: sales@vado.com
www.vado.com

WHERE INSPIRATION FLOWS

TAPS | SHOWERS | FURNITURE

VADO

TECHNICAL DRAWING

COLLECTION: AQUABLADE
PRODUCT CODE: AQB-RO/20/SA-C/P

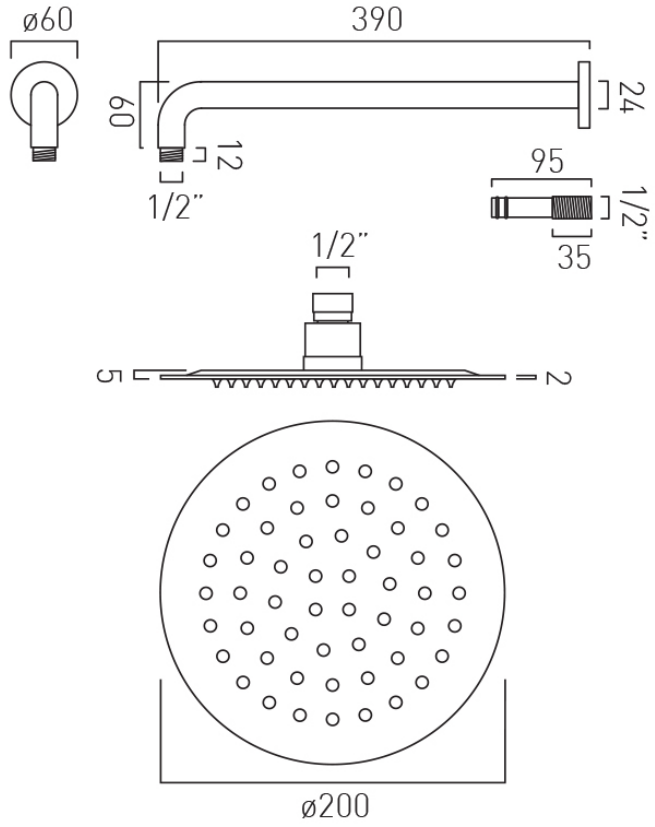

tel: 01934 744466
email: sales@vado.com
www.vado.com

WHERE INSPIRATION FLOWS
TAPS | SHOWERS | FURNITURE

VADO