SPECIFICATION SHEET

COLLECTION: ARRONDI
PRODUCT CODE: ARR-100E/SB-CP



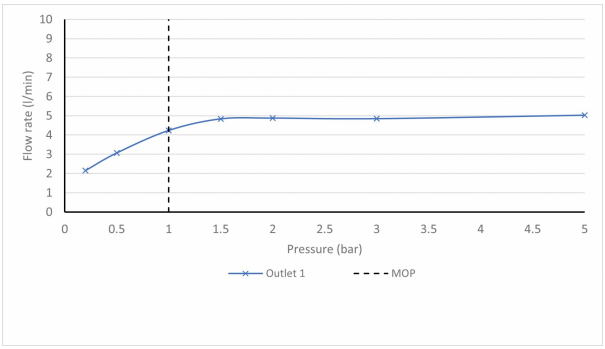

The flow rate displayed is calculated using ideal system conditions. This result should only be taken as an indication as the flow rate may vary depending on the specific in-situ configuration.

TAP TYPE
Tall Extended Taps

FINISH
Chrome

COLLECTION NAME
Arrondi

GUARANTEE
15 Year Guarantee

PLUMBING SYSTEM SUITABILITY
Pumped System, Combination Boiler, Pressurised System

MINIMUM OPERATING PRESSURE
1.0 Bar MP

MAXIMUM OPERATING PRESSURE
5.0 Bar HP

HANDLES
Single Lever

MOUNTING
Deck Mounted

tel: 01934 744466
email: sales@vado.com
www.vado.com

WHERE INSPIRATION FLOWS
TAPS | SHOWERS | FURNITURE
VADO

SPECIFICATION SHEET

COLLECTION: ARRONDI
PRODUCT CODE: ARR-100E/SB-CP

RECOMMENDED FLOW REGULATOR

5 l/min flow regulator fitted as standard

WITH ECOTURN COLD START TECHNOLOGY

No

WITH WATER FLOW STRAIGHTENER

No

WITH WATER FLOW AERATOR

Yes

DECK HOLE DRILL DIAMETER

35mm

SPARE PARTS

ceramic cartridge K-001-J25

STYLE

Round, Traditional, Contemporary

tel: 01934 744466
email: sales@vado.com
www.vado.com

WHERE INSPIRATION FLOWS
TAPS | SHOWERS | FURNITURE

VADO

TECHNICAL DRAWING

COLLECTION: ARRONDI
PRODUCT CODE: ARR-100E/SB-CP

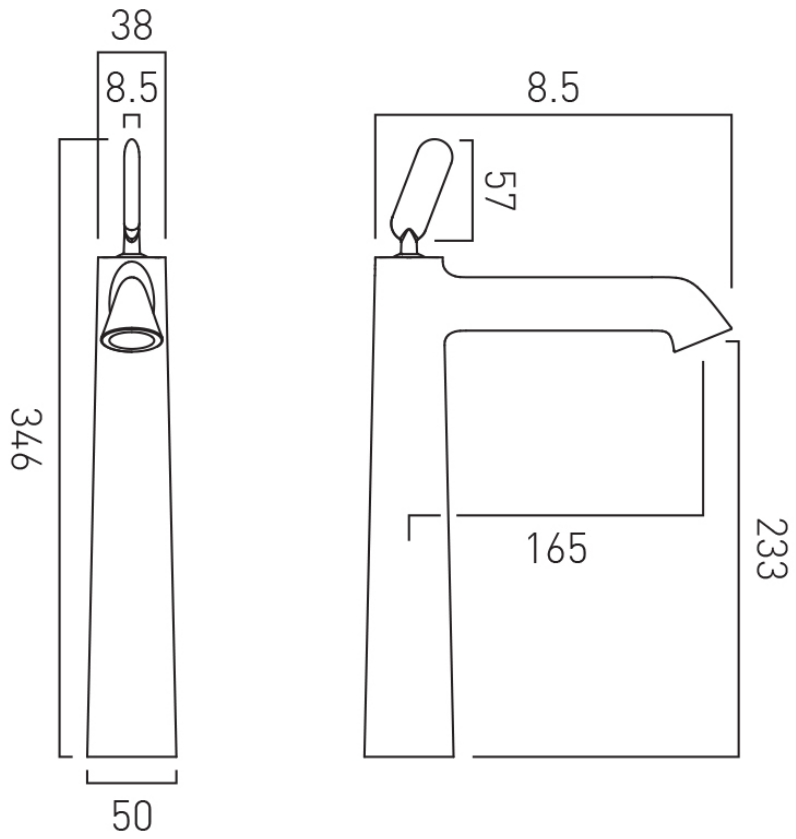

tel: 01934 744466
email: sales@vado.com
www.vado.com

WHERE INSPIRATION FLOWS
TAPS | SHOWERS | FURNITURE

VADO