SPECIFICATION SHEET

COLLECTION: ZOO
PRODUCT CODE: ZOO-CAPSULE-C/P



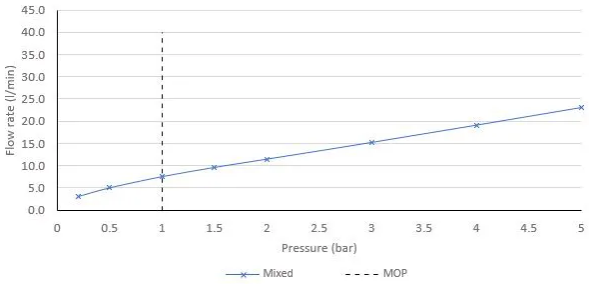

The flow rate displayed is calculated using ideal system conditions. This result should only be taken as an indication as the flow rate may vary depending on the specific in-situ configuration.

SHOWER TYPE
Deck Mounted Kit

PLUMBING SYSTEM SUITABILITY
Pumped System, Combination Boiler, Pressurised System

MOUNTING
Deck Mounted

DECK HOLE DRILL DIAMETER
32mm

INSTALLATION TOLERANCES
escutcheon bath deck thickness (1 - 35mm) fits bath cavities of 50mm wide can be fitted in corner of bath*

HOSE
with flexible hose

FUNCTIONS
1

RUB-CLEAN NOZZLES
No

WITH CAPSULE KIT
Yes

tel: 01934 744466
email: sales@vado.com
www.vado.com

WHERE INSPIRATION FLOWS

TAPS | SHOWERS | FURNITURE

VADO

SPECIFICATION SHEET

COLLECTION: ZOO
PRODUCT CODE: ZOO-CAPSULE-C/P

HEIGHT ADJUSTMENT
height adjustment (480 - 570mm)

MINIMUM OPERATING PRESSURE
1.0 Bar MP

MAXIMUM OPERATING PRESSURE
5.0 Bar HP

NOTES
for backflow prevention please fit with a double check valve
*please do not install under a direct flow of water

COLLECTION NAME
Zoo

FINISH
Chrome

GUARANTEE
15 Year Guarantee

tel: 01934 744466
email: sales@vado.com
www.vado.com

WHERE INSPIRATION FLOWS
TAPS | SHOWERS | FURNITURE
VADO

TECHNICAL DRAWING

COLLECTION: ZOO
PRODUCT CODE: ZOO-CAPSULE-C/P

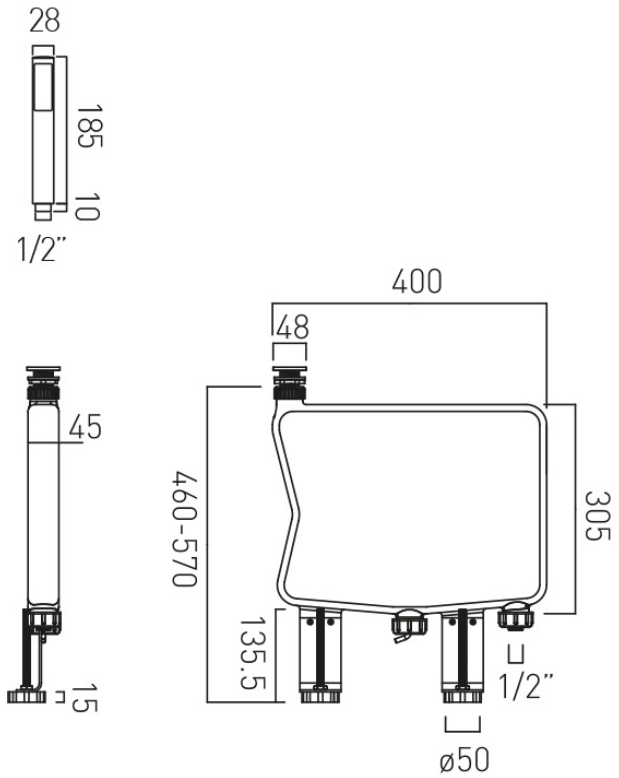

tel: 01934 744466
email: sales@vado.com
www.vado.com

WHERE INSPIRATION FLOWS

TAPS | SHOWERS | FURNITURE

VADO