SPECIFICATION SHEET

COLLECTION: NEBULA
PRODUCT CODE: NEB-MFSRK/SQ-DB-C/P



SHOWER TYPE
Slide Rail Shower Kit

SELF-CLEANING
No

SLIDE RAIL LENGTH
644mm slide rail 704mm overall rail length

WITH CROSS-SPRAY TECHNOLOGY
No

ADJUSTABLE FIXING FOR EASY RETRO FIT
No

WITH TWIST CONTROL
Yes

WITH PUSH BUTTON CONTROL
Yes

WITH HOSE RETAINER
No

RUB-CLEAN NOZZLES
Yes

tel: 01934 744466
email: sales@vado.com
www.vado.com

WHERE INSPIRATION FLOWS
TAPS | SHOWERS | FURNITURE

VADO

SPECIFICATION SHEET

COLLECTION: NEBULA
PRODUCT CODE: NEB-MFSRK/SQ-DB-C/P

FUNCTIONS

3

WITH AIR-INJECTION TECHNOLOGY

No

HOSE

with 150cm hose

MOUNTING

Wall Mounted

PLUMBING SYSTEM SUITABILITY

Pumped System, Combination Boiler, Pressurised System

COLLECTION NAME

Nebula

FINISH

Chrome

MINIMUM OPERATING PRESSURE

1.0 Bar MP

MAXIMUM OPERATING PRESSURE

5.0 Bar HP

GUARANTEE

15 Year Guarantee

tel: 01934 744466
email: sales@vado.com
www.vado.com

WHERE INSPIRATION FLOWS
TAPS | SHOWERS | FURNITURE

VADO

TECHNICAL DRAWING

COLLECTION: NEBULA
PRODUCT CODE: NEB-MFSRK/SQ-DB-C/P

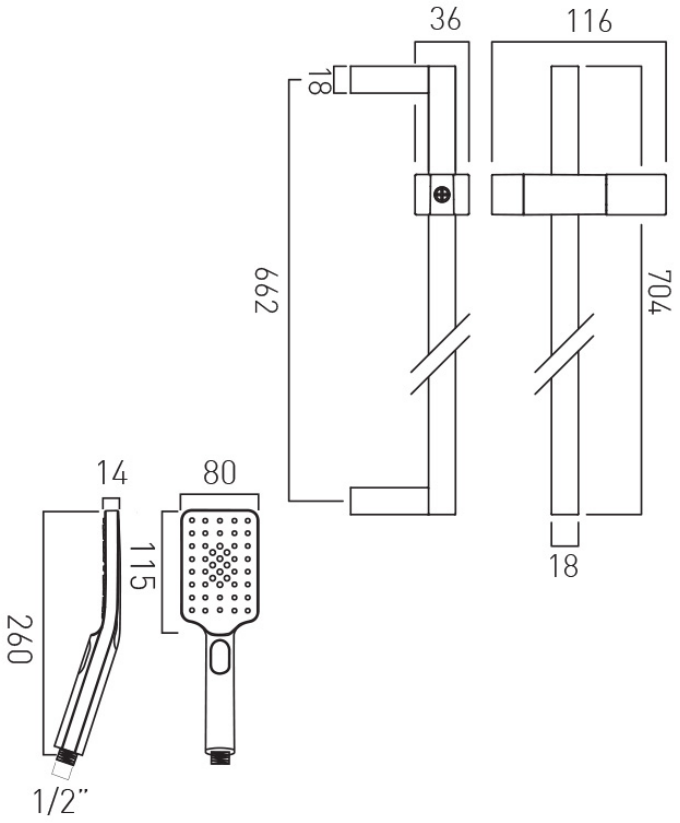

tel: 01934 744466
email: sales@vado.com
www.vado.com

WHERE INSPIRATION FLOWS
TAPS | SHOWERS | FURNITURE

VADO