SPECIFICATION SHEET

COLLECTION: ORA
PRODUCT CODE: ORA-MFSRKWO-RO-CP



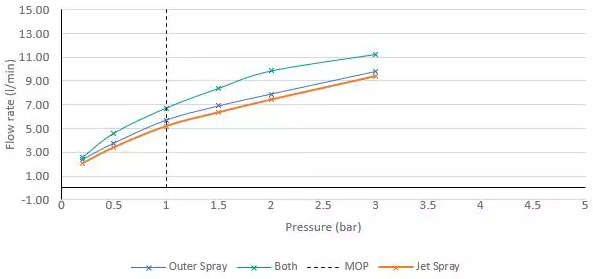

The flow rate displayed is calculated using ideal system conditions. This result should only be taken as an indication as the flow rate may vary depending on the specific in-situ configuration.

SHOWER TYPE
Slide Rail Shower Kit

SELF-CLEANING
No

SLIDE RAIL LENGTH
900mm slide rail

WITH OUTLET / BRACKET
with Integrated Outlet

WITH CROSS-SPRAY TECHNOLOGY
No

ADJUSTABLE FIXING FOR EASY RETRO FIT
No

WITH TWIST CONTROL
No

WITH PUSH BUTTON CONTROL
Yes

WITH HOSE RETAINER
Yes

tel: 01934 744466
email: sales@vado.com
www.vado.com

WHERE INSPIRATION FLOWS

TAPS | SHOWERS | FURNITURE

VADO

SPECIFICATION SHEET

COLLECTION: ORA
PRODUCT CODE: ORA-MFSRKWO-RO-CP

RUB-CLEAN NOZZLES

Yes

FUNCTIONS

3

WITH AIR-INJECTION TECHNOLOGY

No

HOSE

with 150cm hose

MOUNTING

Wall Mounted

PLUMBING SYSTEM SUITABILITY

Pumped System, Combination Boiler, Pressurised System

COLLECTION NAME

Ora

FINISH

Chrome

MINIMUM OPERATING PRESSURE

1.0 Bar MP

MAXIMUM OPERATING PRESSURE

5.0 Bar HP

GUARANTEE

15 Year Guarantee

tel: 01934 744466
email: sales@vado.com
www.vado.com

TECHNICAL DRAWING

COLLECTION: ORA
PRODUCT CODE: ORA-MFSRKWO-RO-CP

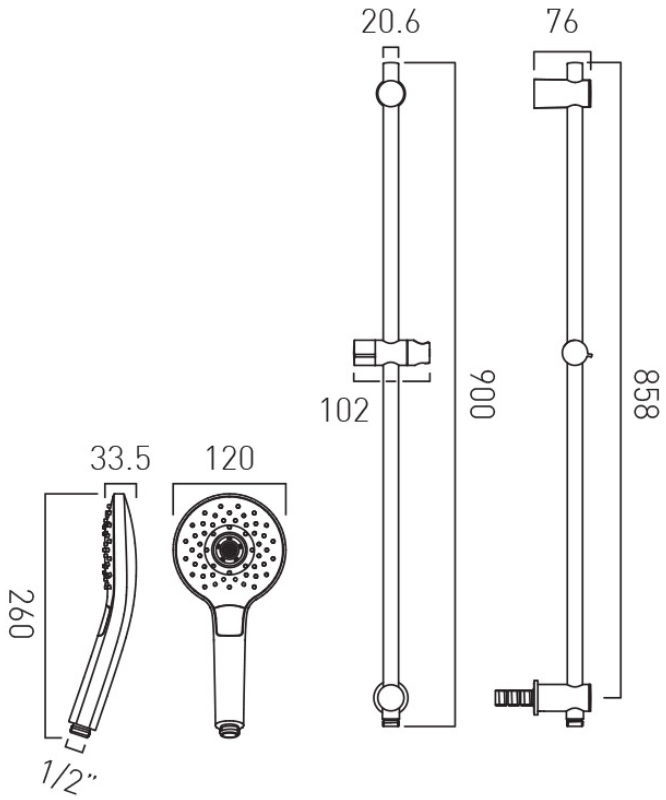

tel: 01934 744466
email: sales@vado.com
www.vado.com

WHERE INSPIRATION FLOWS
TAPS | SHOWERS | FURNITURE

VADO