SPECIFICATION SHEET

COLLECTION: WEDMORE
PRODUCT CODE: BC-WED-WCP-CIS-BN



COLLECTION NAME
Wedmore

FURNITURE TYPE
Toilet

FINISH
Bright Nickel

CISTERN FINISH
Gloss White

KIT COMPRISES
Cistern, Lever and Cover Caps

SHAPE
Square

MOUNTING
Floor Mounted

MATERIAL
Ceramic

HEIGHT
415mm

tel: 01934 744466
email: sales@vado.com
www.vado.com

WHERE INSPIRATION FLOWS
TAPS | SHOWERS | FURNITURE

VADO

SPECIFICATION SHEET

COLLECTION: WEDMORE
PRODUCT CODE: BC-WED-WCP-CIS-BN

DEPTH

170mm

WIDTH

370mm

ADJUSTABLE FLUSH VOLUME

2.6 litres, 4 litres

INLET

G 1/2"

GUARANTEE

25 Year Guarantee

NOTES

*Individual Guarantees - cistern 25 years, lever 6 years, caps 2 years.

tel: 01934 744466
email: sales@vado.com
www.vado.com

WHERE INSPIRATION FLOWS
TAPS | SHOWERS | FURNITURE

VADO

TECHNICAL DRAWING

COLLECTION: WEDMORE
PRODUCT CODE: BC-WED-WCP-CIS-BN

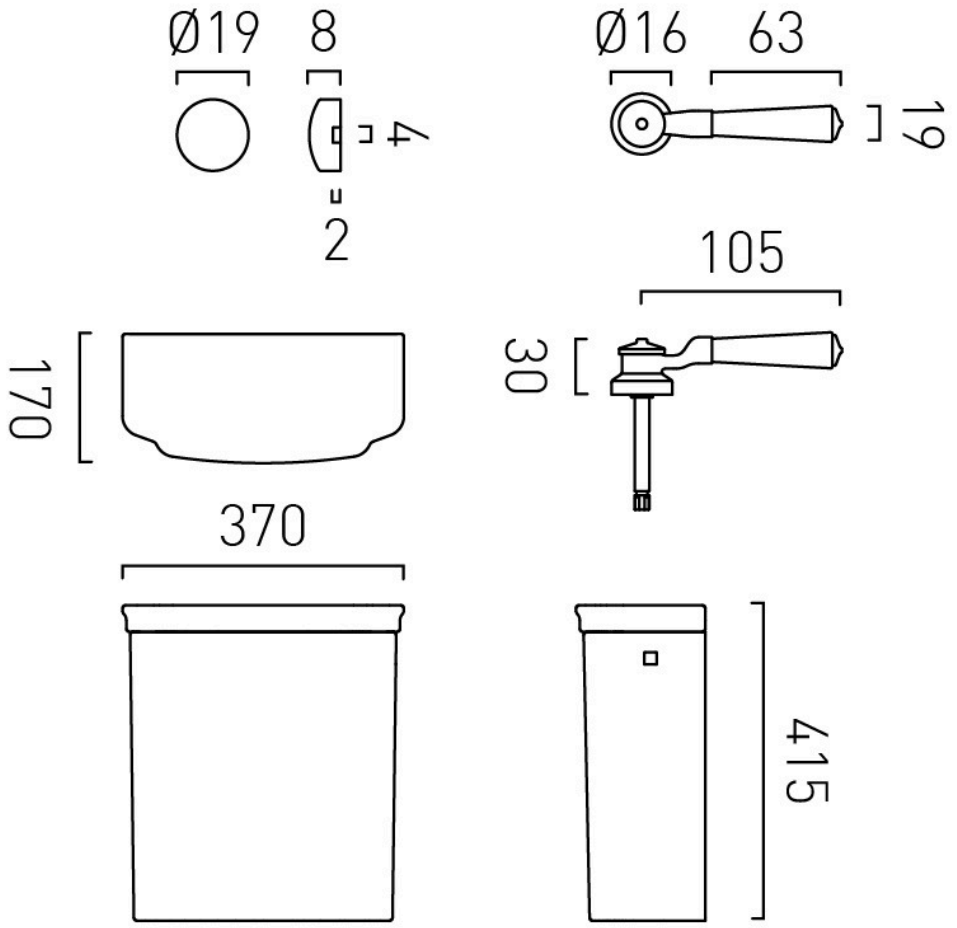

tel: 01934 744466
email: sales@vado.com
www.vado.com

WHERE INSPIRATION FLOWS
TAPS | SHOWERS | FURNITURE

VADO