SPECIFICATION SHEET

COLLECTION: WEDMORE
PRODUCT CODE: BC-WED-M112I-ARC



GUARANTEE
6 Year Guarantee

COLLECTION NAME
Wedmore

FURNITURE TYPE
Mirror

MIRROR SIZE
1120mm

MIRROR SHAPE
Arched

MOUNTING
Wall Mounted

ORIENTATION
Landscape

CONTROL TYPE
Touch Sensor

POWER SOURCE
Mains Powered

tel: 01934 744466
email: sales@vado.com
www.vado.com

WHERE INSPIRATION FLOWS
TAPS | SHOWERS | FURNITURE

VADO

SPECIFICATION SHEET

COLLECTION: WEDMORE
PRODUCT CODE: BC-WED-M112I-ARC

LIGHTING COLOUR TEMPERATURE
2700K warm to 6500K cool

LIGHTING TECHNOLOGY
Tunable/Dimmable Integrated LEDs (long-life, bulb change not required)

LIGHTING SETTINGS
Backlit

DEMINSTER
Separately controlled with a 30 minute auto timer

IP RATING
IP44

CORD LENGTH
1000mm

tel: 01934 744466
email: sales@vado.com
www.vado.com

WHERE INSPIRATION FLOWS
TAPS | SHOWERS | FURNITURE
VADO

TECHNICAL DRAWING

COLLECTION: WEDMORE
PRODUCT CODE: BC-WED-M112I-ARC

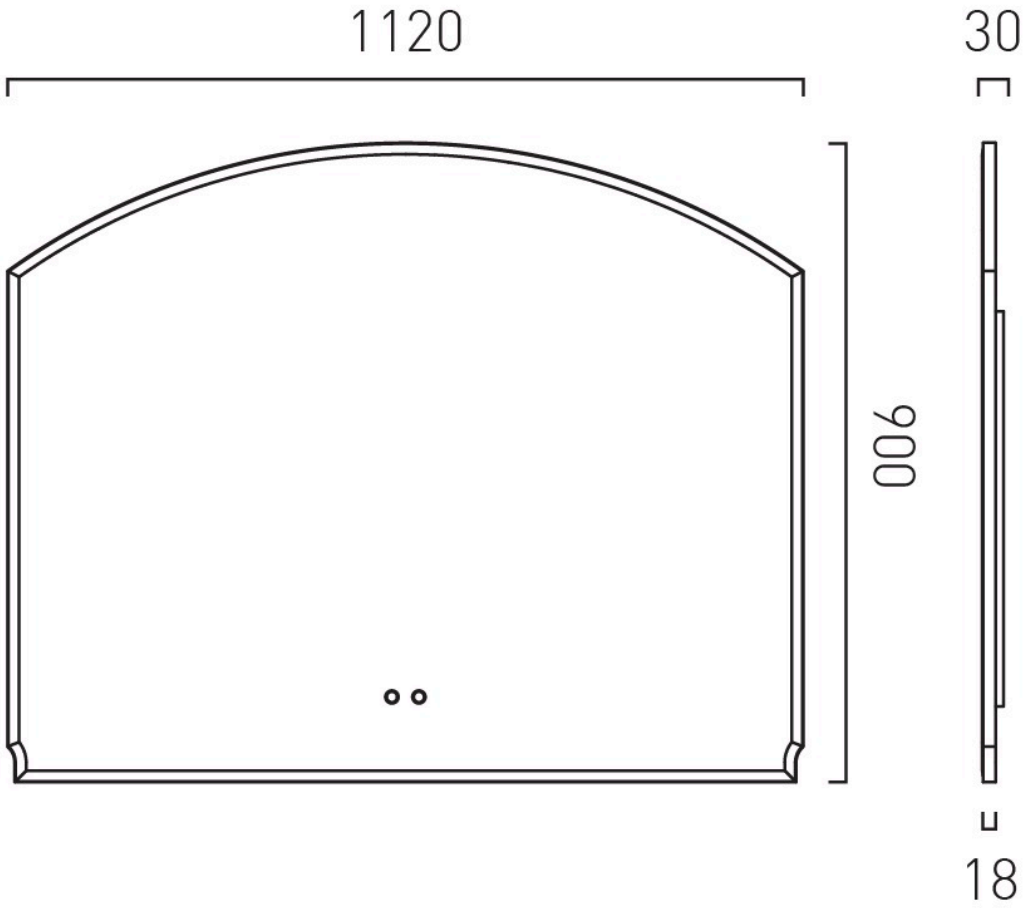

tel: 01934 744466
email: sales@vado.com
www.vado.com

WHERE INSPIRATION FLOWS
TAPS | SHOWERS | FURNITURE

VADO