SPECIFICATION SHEET

COLLECTION: WEDMORE
PRODUCT CODE: BC-AXB-HTR-AV-BRS



COLLECTION NAME

Wedmore

FINISH

Brushed Brass/Crackled White

STYLE

Traditional

GUARANTEE

6 Year Guarantee

tel: 01934 744466
email: sales@vado.com
www.vado.com

WHERE INSPIRATION FLOWS

TAPS | SHOWERS | FURNITURE

VADO

TECHNICAL DRAWING

COLLECTION: WEDMORE
PRODUCT CODE: BC-AXB-HTR-AV-BRS

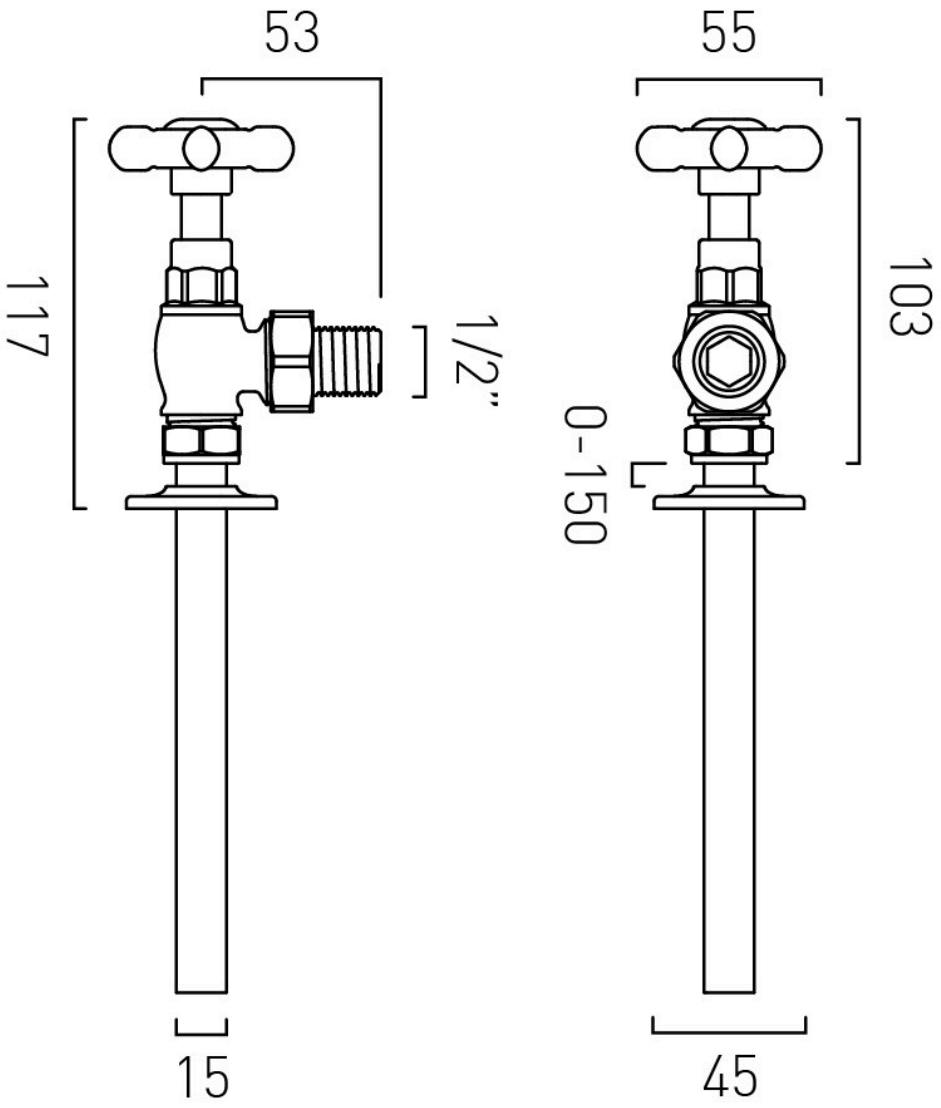

tel: 01934 744466
email: sales@vado.com
www.vado.com

WHERE INSPIRATION FLOWS
TAPS | SHOWERS | FURNITURE

VADO