SPECIFICATION SHEET

COLLECTION: WEDMORE
PRODUCT CODE: BC-HTR-RO960FM-BRZ



ACCESSORY TYPE
Heated Towel Rail

COLLECTION NAME
Wedmore

FINISH
Brushed Bronze

RADIATOR SIZE
600mm

HEIGHT
945mm

DEPTH
148mm

STYLE
Traditional

MOUNTING
Floor Mounted

RAILS
4

tel: 01934 744466
email: sales@vado.com
www.vado.com

WHERE INSPIRATION FLOWS
TAPS | SHOWERS | FURNITURE

VADO

SPECIFICATION SHEET

COLLECTION: WEDMORE
PRODUCT CODE: BC-HTR-RO960FM-BRZ

RADIATOR VALVES

Not included

HEAT OUTPUT

BTU Δt 50°C : 545

MAXIMUM OPERATING PRESSURE

6.0 Bar HP

MAX OPERATING TEMPERATURE

80°C

GUARANTEE

6 Year Guarantee

tel: 01934 744466
email: sales@vado.com
www.vado.com

WHERE INSPIRATION FLOWS
TAPS | SHOWERS | FURNITURE

VADO

TECHNICAL DRAWING

COLLECTION: WEDMORE
PRODUCT CODE: BC-HTR-RO960FM-BRZ

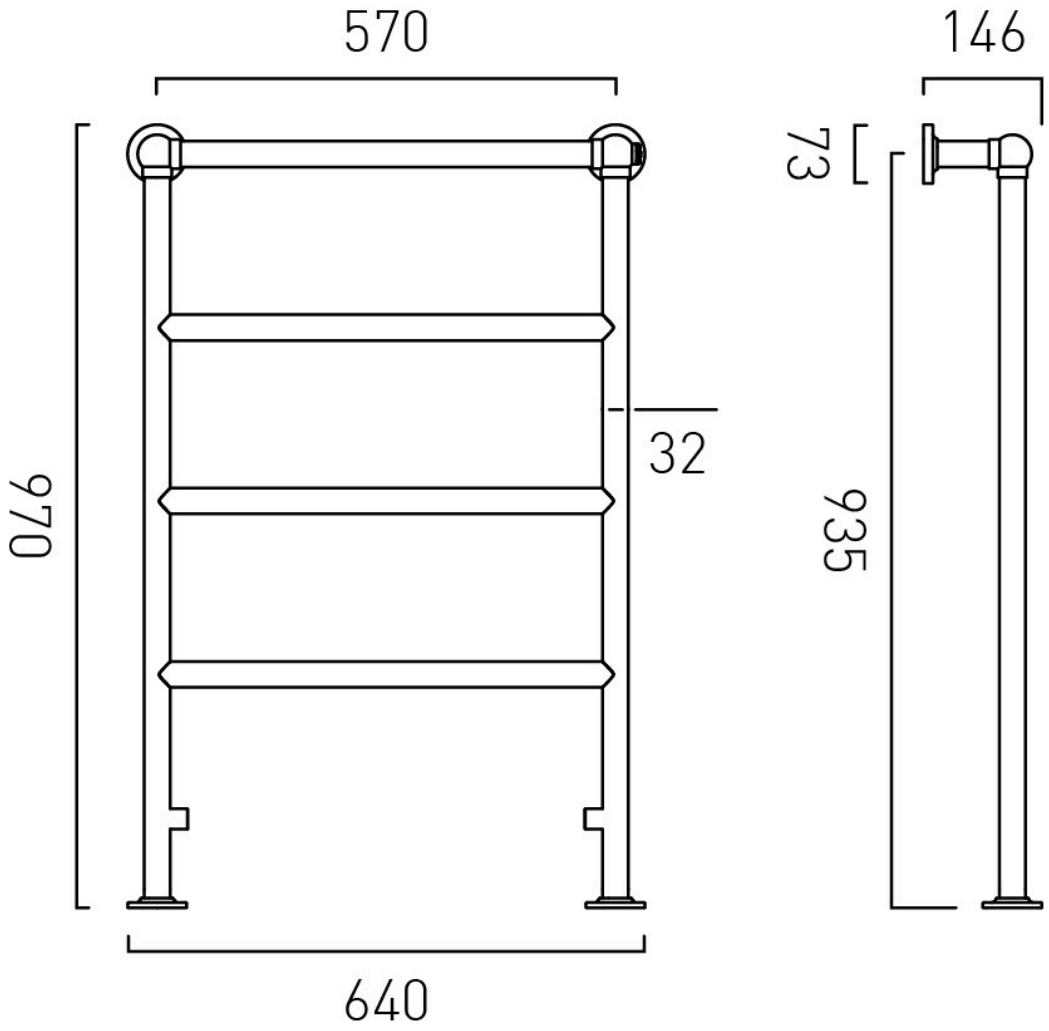

tel: 01934 744466
email: sales@vado.com
www.vado.com

WHERE INSPIRATION FLOWS
TAPS | SHOWERS | FURNITURE

VADO