SPECIFICATION SHEET

COLLECTION: WEDMORE
PRODUCT CODE: BC-HTR-RO715WH-BN



ACCESSORY TYPE
Heated Towel Rail

COLLECTION NAME
Wedmore

FINISH
Bright Nickel

RADIATOR SIZE
600mm

HEIGHT
945mm

DEPTH
148mm

STYLE
Traditional

MOUNTING
Wall Mounted

RAILS
4

tel: 01934 744466
email: sales@vado.com
www.vado.com

WHERE INSPIRATION FLOWS
TAPS | SHOWERS | FURNITURE

VADO

SPECIFICATION SHEET

COLLECTION: WEDMORE
PRODUCT CODE: BC-HTR-RO715WH-BN

RADIATOR VALVES

Not included

HEAT OUTPUT

BTU Δt 50°C : 477

MAXIMUM OPERATING PRESSURE

6.0 Bar HP

MAX OPERATING TEMPERATURE

80°C

GUARANTEE

6 Year Guarantee

tel: 01934 744466
email: sales@vado.com
www.vado.com

WHERE INSPIRATION FLOWS

TAPS | SHOWERS | FURNITURE

VADO

TECHNICAL DRAWING

COLLECTION: WEDMORE
PRODUCT CODE: BC-HTR-RO715WH-BN

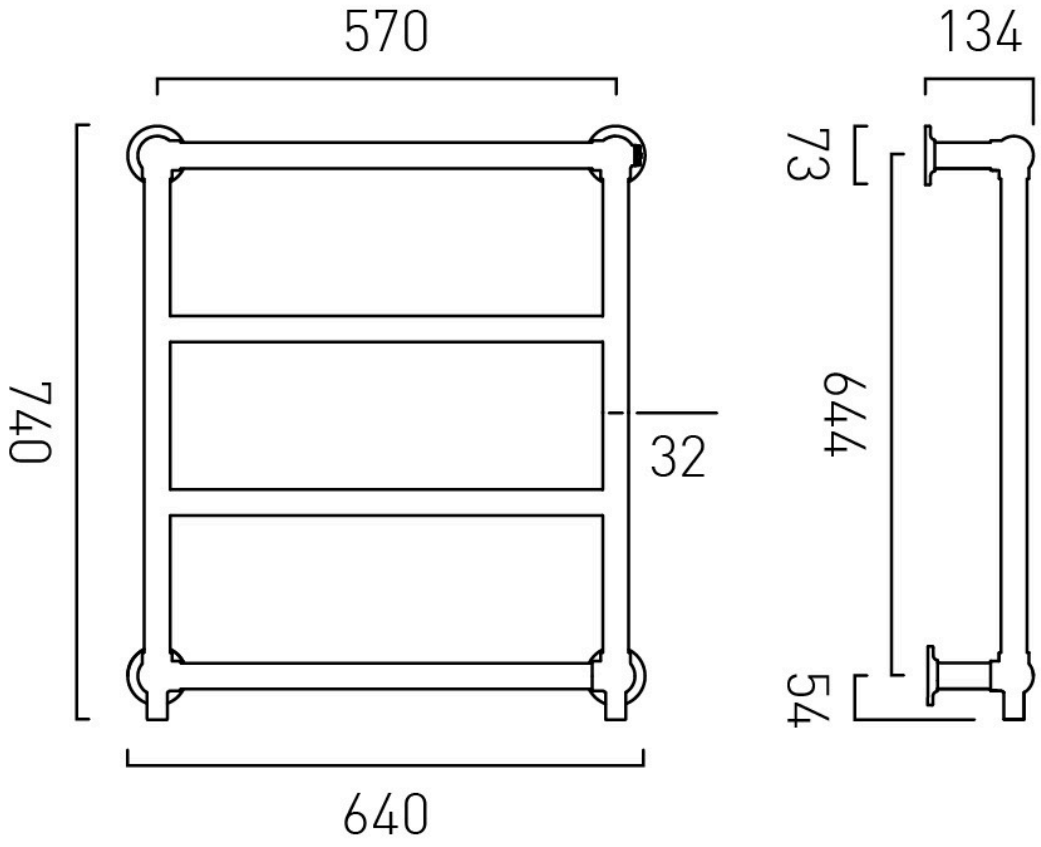

tel: 01934 744466
email: sales@vado.com
www.vado.com

WHERE INSPIRATION FLOWS
TAPS | SHOWERS | FURNITURE

VADO