SPECIFICATION SHEET

COLLECTION: WEDMORE
PRODUCT CODE: BC-WC-TSH1-CA-BN



COLLECTION NAME
Wedmore

FURNITURE TYPE
Toilet Seat

FINISH
Cashmere

HINGE FINISH
Bright Nickel

SHAPE
Round

GUARANTEE
2 Year Guarantee

tel: 01934 744466
email: sales@vado.com
www.vado.com

WHERE INSPIRATION FLOWS
TAPS | SHOWERS | FURNITURE

VADO

TECHNICAL DRAWING

COLLECTION: WEDMORE
PRODUCT CODE: BC-WC-TSH1-CA-BN

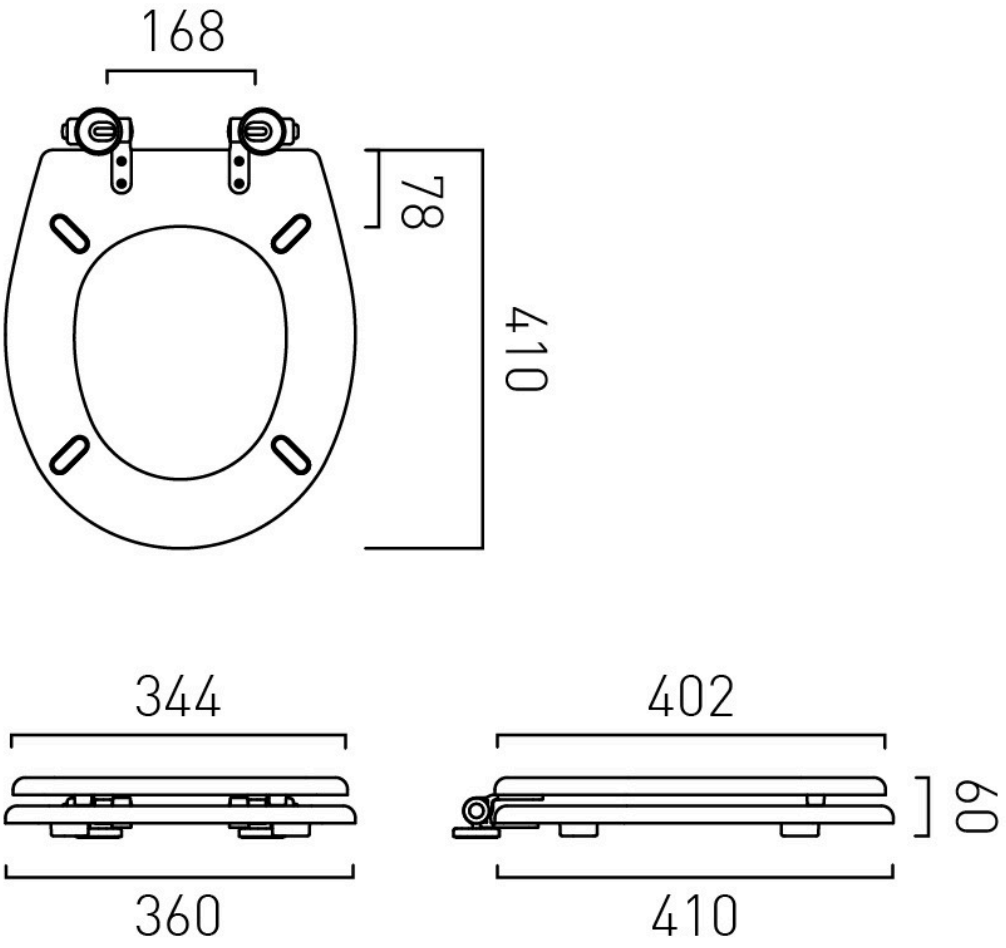

tel: 01934 744466
email: sales@vado.com
www.vado.com

WHERE INSPIRATION FLOWS
TAPS | SHOWERS | FURNITURE

VADO