SPECIFICATION SHEET

COLLECTION: WEDMORE
PRODUCT CODE: BC-WED-BTH15FS-GW



COLLECTION NAME
Wedmore

FURNITURE TYPE
Bath

FINISH
Gloss White

BATH SIZE
1500mm

MATERIAL
Acrylic + FRP

OVERFLOW
Integrated

BATH RIM THICKNESS
18mm

INTERNAL DEPTH
434mm

WATER CAPACITY
205L

tel: 01934 744466
email: sales@vado.com
www.vado.com

WHERE INSPIRATION FLOWS
TAPS | SHOWERS | FURNITURE

VADO

SPECIFICATION SHEET

COLLECTION: WEDMORE
PRODUCT CODE: BC-WED-BTH15FS-GW

RECOMMENDED WASTE

WG-495 / BC-495

WASTE POSITION

Central

NET WEIGHT

40kg

GUARANTEE

10 Year Guarantee

tel: 01934 744466
email: sales@vado.com
www.vado.com

WHERE INSPIRATION FLOWS

TAPS | SHOWERS | FURNITURE

VADO

TECHNICAL DRAWING

COLLECTION: WEDMORE
PRODUCT CODE: BC-WED-BTH15FS-GW

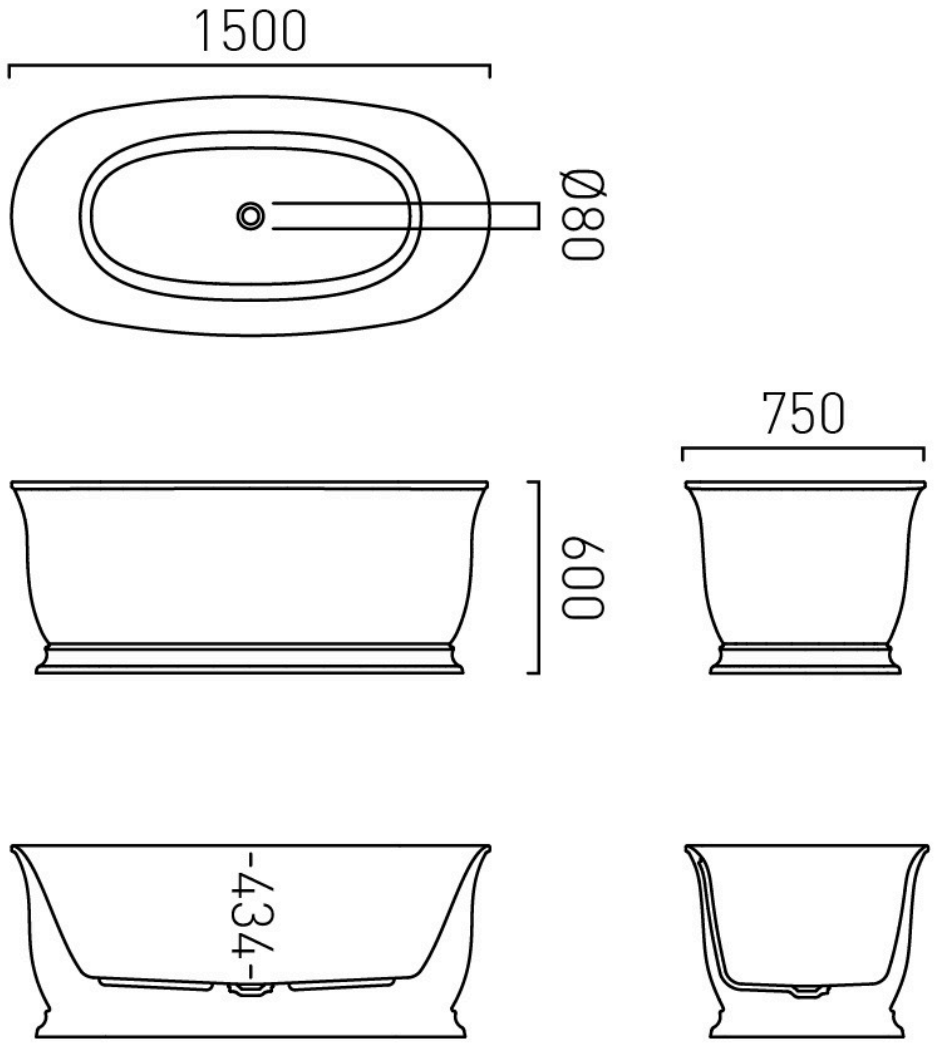

tel: 01934 744466
email: sales@vado.com
www.vado.com

WHERE INSPIRATION FLOWS
TAPS | SHOWERS | FURNITURE

VADO