SPECIFICATION SHEET

COLLECTION: WEDMORE
PRODUCT CODE: BC-WED-WTNS8-RW



COLLECTION NAME
Wedmore

FURNITURE TYPE
Worktop

FINISH
Ramson White

WORKTOP SIZE
800mm

MATERIAL
Natural Marble Stone

THICKNESS
18mm

TAP HOLES
0 Holes (Undrilled)

VANITY SUITABILITY
Wedmore 830mm Vanity

BASIN SUITABILITY
Countertop Basin

tel: 01934 744466
email: sales@vado.com
www.vado.com

WHERE INSPIRATION FLOWS
TAPS | SHOWERS | FURNITURE
VADO

SPECIFICATION SHEET

COLLECTION: WEDMORE
PRODUCT CODE: BC-WED-WTNS8-RW

GUARANTEE

10 Year Guarantee

tel: 01934 744466
email: sales@vado.com
www.vado.com

WHERE INSPIRATION FLOWS

TAPS | SHOWERS | FURNITURE

VADO

TECHNICAL DRAWING

COLLECTION: WEDMORE
PRODUCT CODE: BC-WED-WTNS8-RW

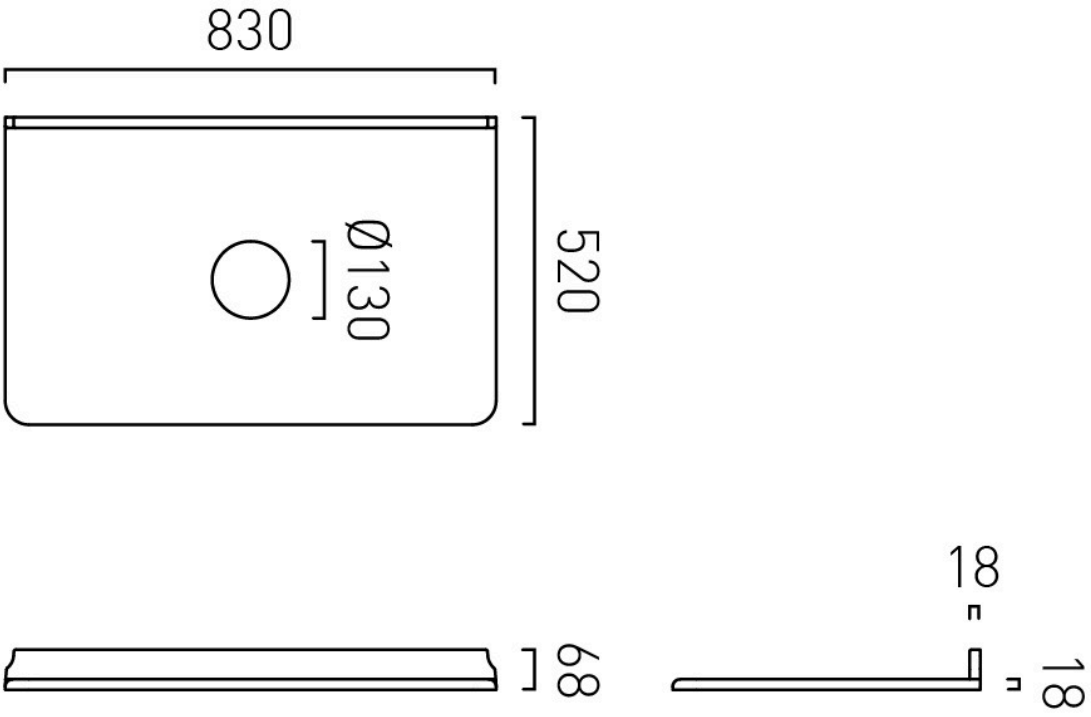

tel: 01934 744466
email: sales@vado.com
www.vado.com

WHERE INSPIRATION FLOWS
TAPS | SHOWERS | FURNITURE

VADO