SPECIFICATION SHEET

COLLECTION: WEDMORE
PRODUCT CODE: BC-WED-BNS12-RW



COLLECTION NAME
Wedmore

FURNITURE TYPE
Inset Basin

BASIN TYPE
Underslung Basin

BASIN WIDTH
1200mm

BASIN SHAPE
Square

FINISH
Ramson White

GROSS WEIGHT
49.7kg

BASIN MATERIAL
Natural Marble Stone

VANITY SUITABILITY
Wedmore 1230mm Vanity

tel: 01934 744466
email: sales@vado.com
www.vado.com

WHERE INSPIRATION FLOWS
TAPS | SHOWERS | FURNITURE

VADO

SPECIFICATION SHEET

COLLECTION: WEDMORE
PRODUCT CODE: BC-WED-BNS12-RW

TAP HOLES
0 Holes (Undrilled)

GUARANTEE
10 Year Guarantee

OVERFLOW
Integrated

RECOMMENDED WASTE
BC-395

NOTES
BC-AXB-461 with 0-65mm adjustability when paired with Wedmore Closed Storage Vanity Units
BC-AXB-461 not compatible when paired with Wedmore Open Storage Vanity Units

tel: 01934 744466
email: sales@vado.com
www.vado.com

TECHNICAL DRAWING

COLLECTION: WEDMORE
PRODUCT CODE: BC-WED-BNS12-RW

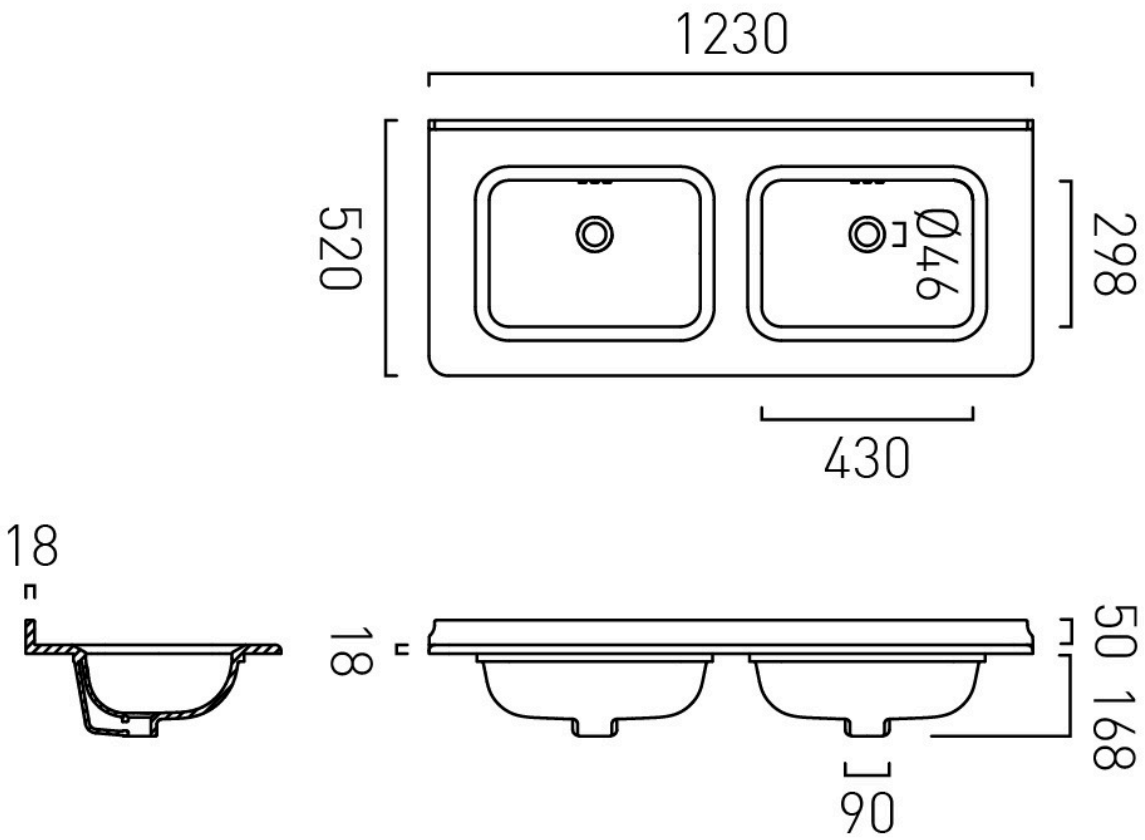

tel: 01934 744466
email: sales@vado.com
www.vado.com

WHERE INSPIRATION FLOWS
TAPS | SHOWERS | FURNITURE

VADO