# SPECIFICATION SHEET

## COLLECTION: WEDMORE
## PRODUCT CODE: BC-HANB-B-BRS



COLLECTION NAME
Wedmore

FURNITURE TYPE
Handle

FINISH
Brushed Brass

HANDLE TYPE
Bar

STYLE
Traditional

GUARANTEE
6 Year Guarantee

DRILL HOLE CENTRES
110mm

tel: 01934 744466
email: sales@vado.com
www.vado.com

WHERE INSPIRATION FLOWS
TAPS | SHOWERS | FURNITURE

VADO

# TECHNICAL DRAWING

COLLECTION: WEDMORE
PRODUCT CODE: BC-HANB-B-BRS

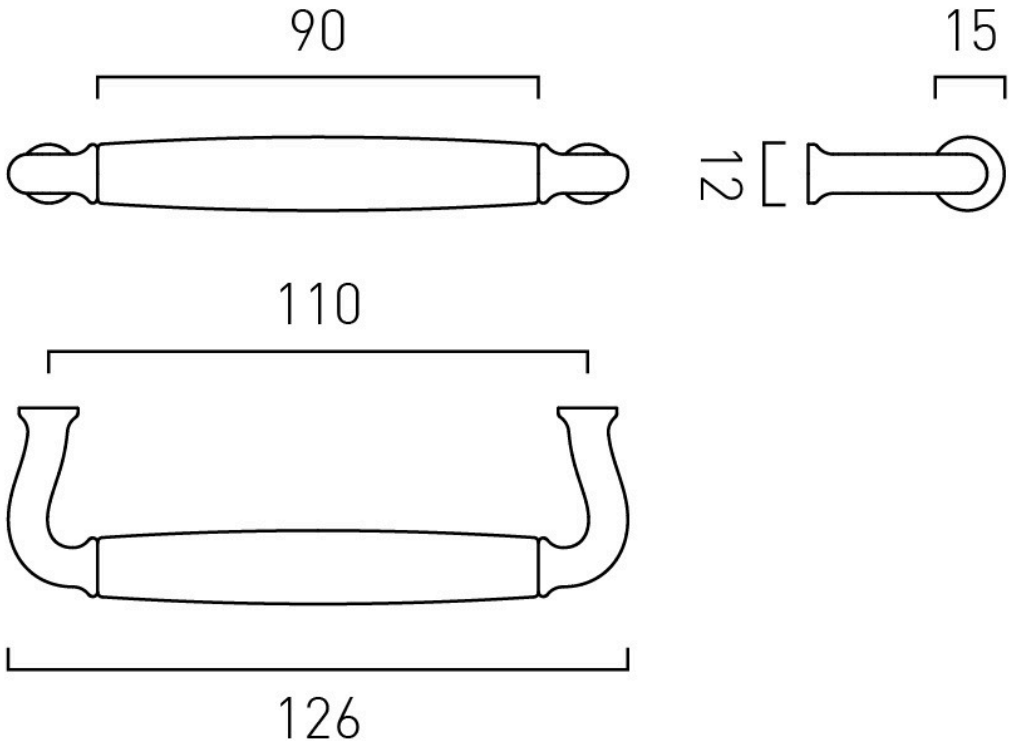


tel: 01934 744466
email: sales@vado.com
www.vado.com

WHERE INSPIRATION FLOWS
TAPS | SHOWERS | FURNITURE

VADO