SPECIFICATION SHEET

COLLECTION: WEDMORE
PRODUCT CODE: BC-HANP-CP



COLLECTION NAME
Wedmore

FURNITURE TYPE
Handle

FINISH
Chrome

HANDLE TYPE
Cup

STYLE
Traditional

GUARANTEE
6 Year Guarantee

DRILL HOLE CENTRES
50mm

tel: 01934 744466
email: sales@vado.com
www.vado.com

WHERE INSPIRATION FLOWS
TAPS | SHOWERS | FURNITURE

VADO

TECHNICAL DRAWING

COLLECTION: WEDMORE
PRODUCT CODE: BC-HANP-CP

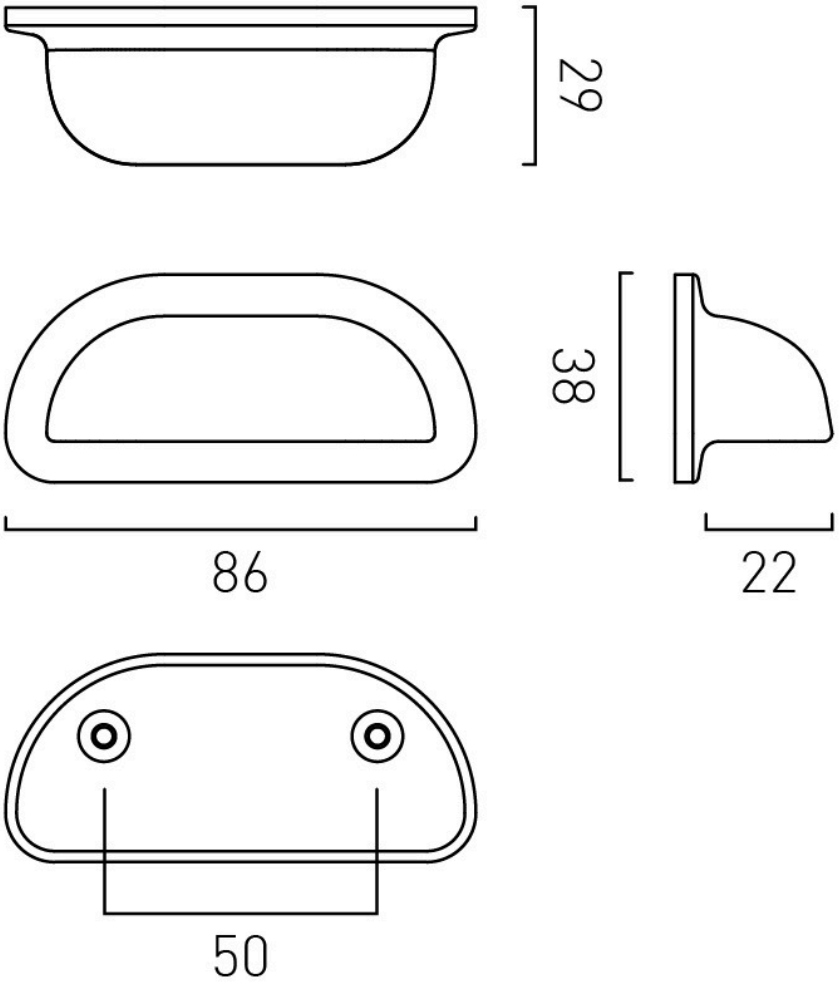

tel: 01934 744466
email: sales@vado.com
www.vado.com

WHERE INSPIRATION FLOWS
TAPS | SHOWERS | FURNITURE

VADO