SPECIFICATION SHEET

COLLECTION: WEDMORE
PRODUCT CODE: BC-WED-BC6-2TH-GW



COLLECTION NAME
Wedmore

FURNITURE TYPE
Inset Basin

BASIN TYPE
Inset Basin

BASIN WIDTH
600mm

BASIN SHAPE
Square

FINISH
Gloss White

BASIN MATERIAL
Ceramic

VANITY SUITABILITY
Wedmore 630mm Vanity

TAP HOLES
2 Holes

tel: 01934 744466
email: sales@vado.com
www.vado.com

WHERE INSPIRATION FLOWS
TAPS | SHOWERS | FURNITURE

VADO

SPECIFICATION SHEET

COLLECTION: WEDMORE
PRODUCT CODE: BC-WED-BC6-2TH-GW

GUARANTEE

25 Year Guarantee

OVERFLOW

Integrated

NOTES

BC-AXB-461 Adjustability with BC-WED-FXFM - 0-105mm (full extension)
BC-AXB-461 Adjustability with BC-WED-FXFM-OS - 0-30mm

tel: 01934 744466
email: sales@vado.com
www.vado.com

WHERE INSPIRATION FLOWS
TAPS | SHOWERS | FURNITURE

VADO

TECHNICAL DRAWING

COLLECTION: WEDMORE
PRODUCT CODE: BC-WED-BC6-2TH-GW

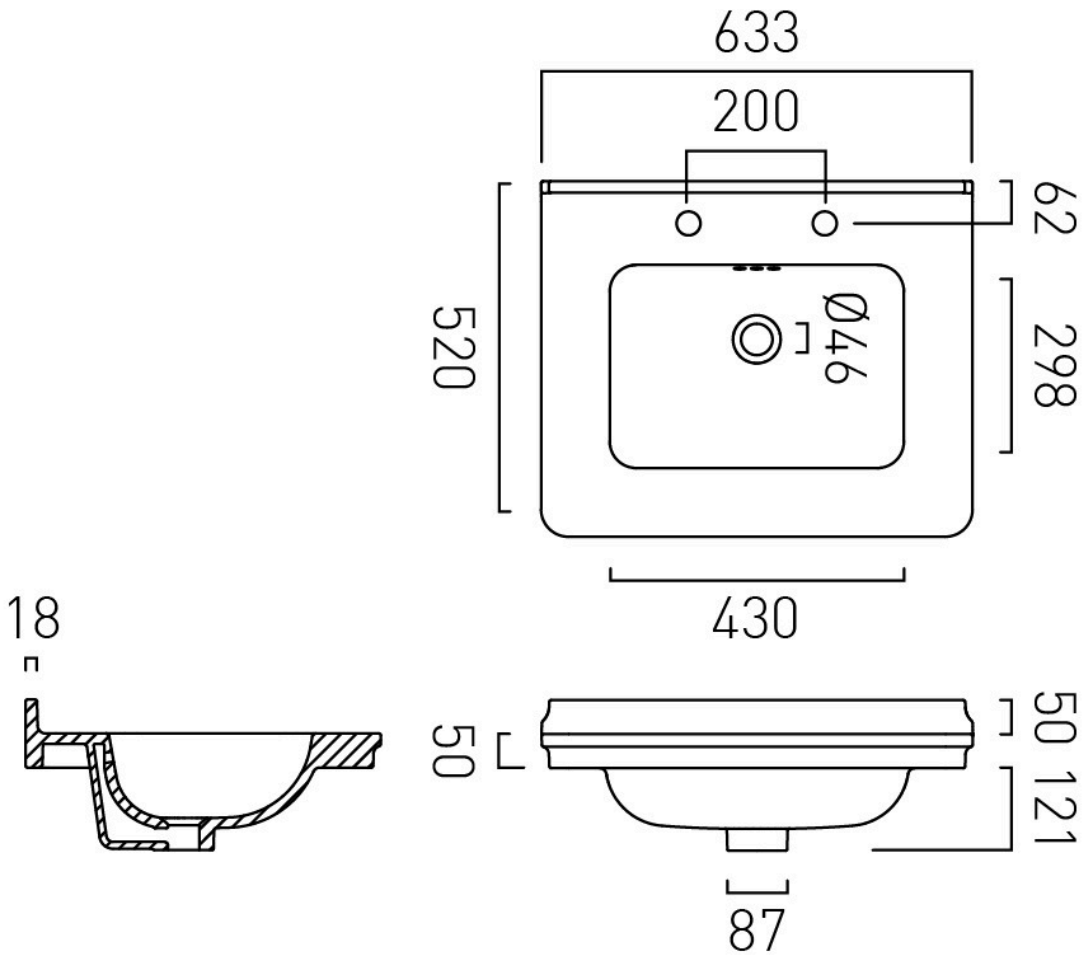

tel: 01934 744466
email: sales@vado.com
www.vado.com

WHERE INSPIRATION FLOWS
TAPS | SHOWERS | FURNITURE

VADO