SPECIFICATION SHEET

COLLECTION: WEDMORE
PRODUCT CODE: BC-WED-F8FM-OS-LW



COLLECTION NAME
Wedmore

FURNITURE TYPE
Vanity Unit

FINISH
Linen White

VANITY WIDTH
830mm

MOUNTING
Floor Mounted

DRAWERS
2 Drawers

HANDLES
2 Handle

OPENING MECHANISM
Standard Handle (Not Included)

DRAWER/DOOR MECHANISM
2 Quick Release, Soft Close Drawers

tel: 01934 744466
email: sales@vado.com
www.vado.com

WHERE INSPIRATION FLOWS
TAPS | SHOWERS | FURNITURE

VADO

SPECIFICATION SHEET

COLLECTION: WEDMORE
PRODUCT CODE: BC-WED-F8FM-OS-LW

GUARANTEE
6 Year Guarantee

BASIN SUITABILITY
Wedmore Ceramic , Wedmore Natural Marble, Wedmore Countertop and Worktop

MATERIAL
Solid Wood, Wood Veneer

SPACE SAVING SOLUTION
Bottle trap cut out in top drawer, 40mm plumbing void

ASSEMBLY TYPE
Pre-Assembled

NOTES
180mm open storage, adjustable floor levelling

tel: 01934 744466
email: sales@vado.com
www.vado.com

TECHNICAL DRAWING

COLLECTION: WEDMORE
PRODUCT CODE: BC-WED-F8FM-OS-LW

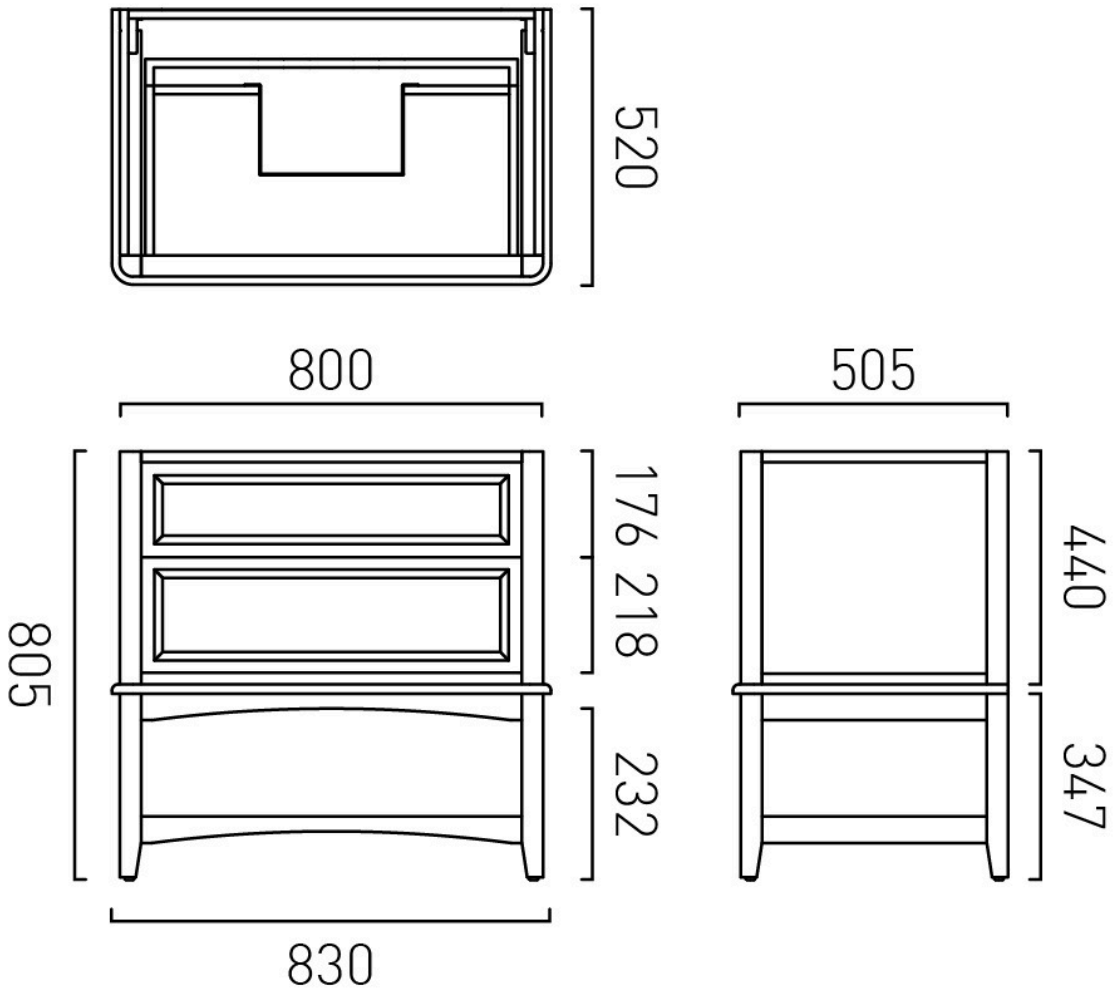

tel: 01934 744466
email: sales@vado.com
www.vado.com

WHERE INSPIRATION FLOWS
TAPS | SHOWERS | FURNITURE

VADO