SPECIFICATION SHEET

COLLECTION: AXBRIDGE
PRODUCT CODE: BC-AXB-109-BRN



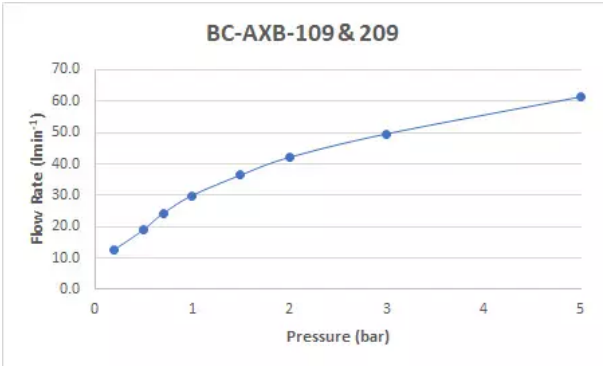

The flow rate displayed is calculated using ideal system conditions. This result should only be taken as an indication as the flow rate may vary depending on the specific in-situ configuration.

TAP TYPE
Basin Mixer Taps

FINISH
Brushed Nickel

COLLECTION NAME
Axbridge

GUARANTEE
15 Year Guarantee

PLUMBING SYSTEM SUITABILITY
Gravity System, Pumped System, Combination Boiler, Pressurised System

MINIMUM OPERATING PRESSURE
0.2 Bar LP

MAXIMUM OPERATING PRESSURE
5.0 Bar HP

MOUNTING
Wall Mounted

INSTALLATION TOLERANCES
min-max wall mount 56-81mm

tel: 01934 744466
email: sales@vado.com
www.vado.com

WHERE INSPIRATION FLOWS

TAPS | SHOWERS | FURNITURE

VADO

SPECIFICATION SHEET

COLLECTION: AXBRIDGE
PRODUCT CODE: BC-AXB-109-BRN

RECOMMENDED FLOW REGULATOR

FR-106/6-PLA

WITH ECOTURN COLD START TECHNOLOGY

No

WITH WATER FLOW STRAIGHTENER

Yes

WITH WATER FLOW AERATOR

No

CONNECTIONS / FITTINGS

2 x 1/2" inlets

SPARE PARTS

Cold ceramic cartridge FL-501-RTChot ceramic cartridge FL-501-LTC

STYLE

Traditional, Cross Handles

tel: 01934 744466
email: sales@vado.com
www.vado.com

WHERE INSPIRATION FLOWS
TAPS | SHOWERS | FURNITURE

VADO

TECHNICAL DRAWING

COLLECTION: AXBRIDGE
PRODUCT CODE: BC-AXB-109-BRN

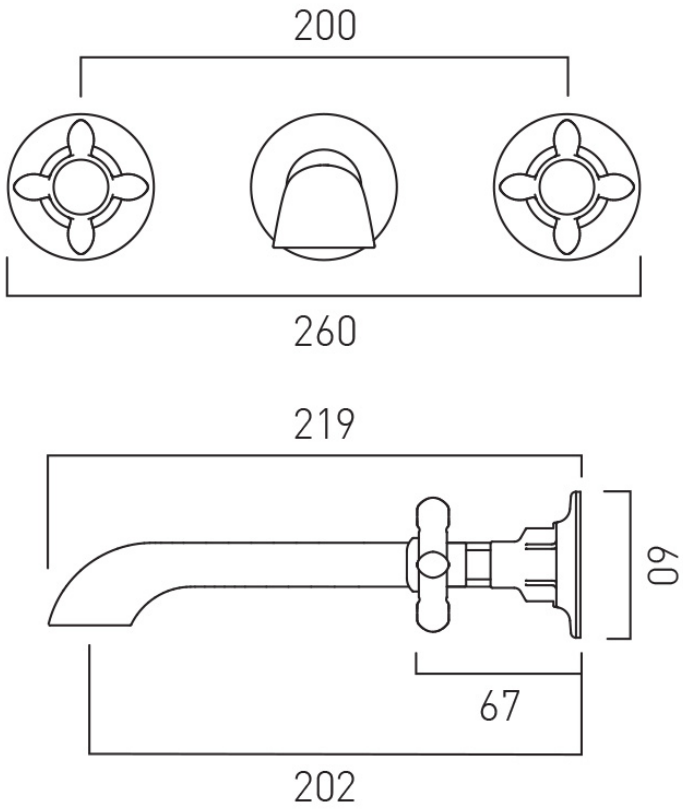

tel: 01934 744466
email: sales@vado.com
www.vado.com

WHERE INSPIRATION FLOWS
TAPS | SHOWERS | FURNITURE

VADO