SPECIFICATION SHEET

COLLECTION: AXBRIDGE
PRODUCT CODE: BC-AXB-250A-B-BRZ



TAP TYPE
Kitchen Taps

PLUMBING SYSTEM SUITABILITY
Gravity System, Pumped System, Combination Boiler, Pressurised System

FINISH
Brushed Bronze/Black

COLLECTION NAME
Axbridge

STYLE
Traditional, Lever Handles

DECK HOLE DRILL DIAMETER
35mm

SPARE PARTS
Hot ceramic cartridge FL-501-LTCcold ceramic cartridge FL-501-RTC

CONNECTIONS / FITTINGS
2 x 1/2" 400mm flexipipe connections

WITH WATER FLOW AERATOR
No

tel: 01934 744466
email: sales@vado.com
www.vado.com

WHERE INSPIRATION FLOWS
TAPS | SHOWERS | FURNITURE
VADO

SPECIFICATION SHEET

COLLECTION: AXBRIDGE
PRODUCT CODE: BC-AXB-250A-B-BRZ

WITH SWIVEL SPOUT

1

WITH WATER FLOW STRAIGHTENER

Yes

MOUNTING

Deck Mounted

MINIMUM OPERATING PRESSURE

0.2 Bar LP

MAXIMUM OPERATING PRESSURE

5.0 Bar HP

tel: 01934 744466
email: sales@vado.com
www.vado.com

WHERE INSPIRATION FLOWS
TAPS | SHOWERS | FURNITURE

VADO

TECHNICAL DRAWING

COLLECTION: AXBRIDGE
PRODUCT CODE: BC-AXB-250A-B-BRZ

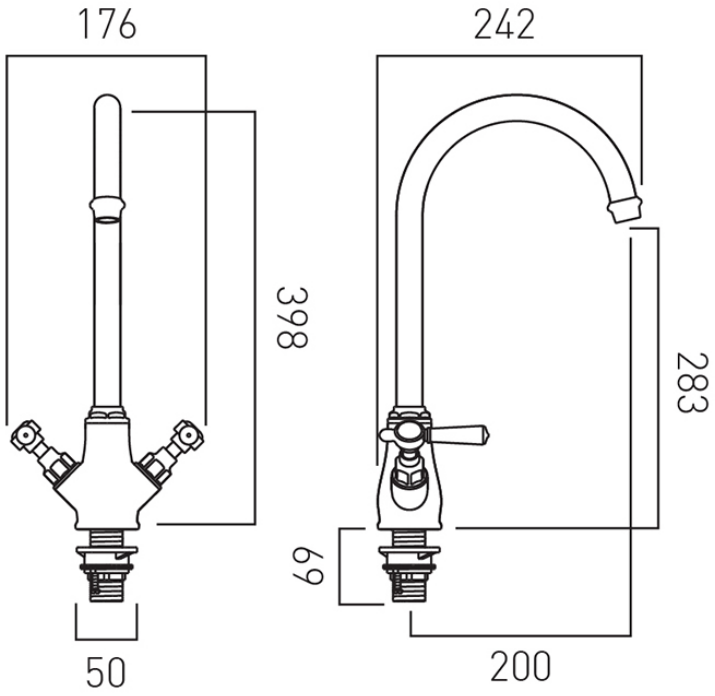

tel: 01934 744466
email: sales@vado.com
www.vado.com

WHERE INSPIRATION FLOWS
TAPS | SHOWERS | FURNITURE

VADO