# SPECIFICATION SHEET

## COLLECTION: AXBRIDGE
## PRODUCT CODE: BC-AXB-253A-BRZ



### TAP TYPE
Kitchen Taps

### PLUMBING SYSTEM SUITABILITY
Gravity System, Pumped System, Combination Boiler, Pressurised System

### FINISH
Brushed Bronze

### COLLECTION NAME
Axbridge

### STYLE
Traditional, Lever Handles

### DECK HOLE DRILL DIAMETER
22mm

### SPARE PARTS
Hot ceramic cartridge FL-501-LTCcold ceramic cartridge FL-501-RTC

### CONNECTIONS / FITTINGS
2 x 1/2" threaded inlet

### WITH WATER FLOW AERATOR
No

tel: 01934 744466
email: sales@vado.com
www.vado.com

WHERE INSPIRATION FLOWS
TAPS | SHOWERS | FURNITURE

VADO

# SPECIFICATION SHEET

## COLLECTION: AXBRIDGE
## PRODUCT CODE: BC-AXB-253A-BRZ

WITH WATER FLOW STRAIGHTENER

Yes

MOUNTING

Pillar Mounted

MINIMUM OPERATING PRESSURE

0.2 Bar LP

MAXIMUM OPERATING PRESSURE

5.0 Bar HP

tel: 01934 744466
email: sales@vado.com
www.vado.com

# TECHNICAL DRAWING

COLLECTION: AXBRIDGE
PRODUCT CODE: BC-AXB-253A-BRZ

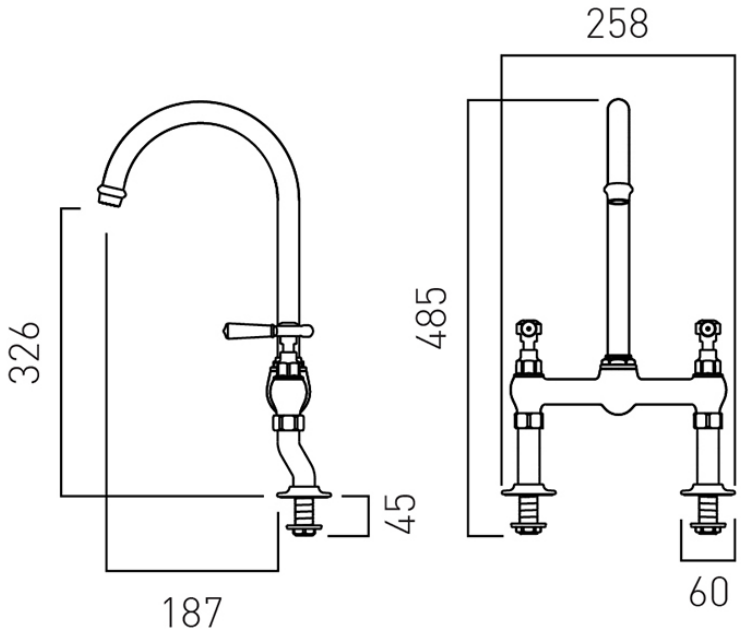


tel: 01934 744466
email: sales@vado.com
www.vado.com

WHERE INSPIRATION FLOWS
TAPS | SHOWERS | FURNITURE

VADO