SPECIFICATION SHEET

COLLECTION: AXBRIDGE
PRODUCT CODE: BC-AXB-153A-BRZ



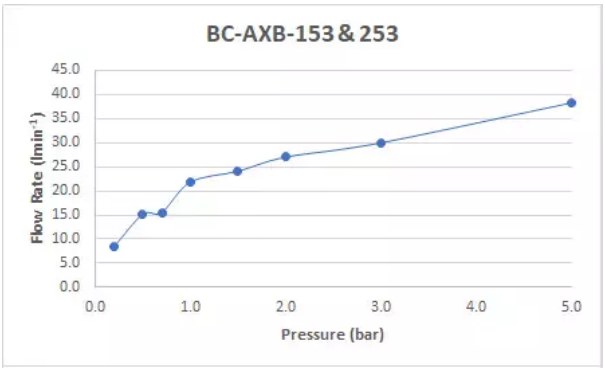

The flow rate displayed is calculated using ideal system conditions. This result should only be taken as an indication as the flow rate may vary depending on the specific in-situ configuration.

TAP TYPE
Kitchen Taps

PLUMBING SYSTEM SUITABILITY
Gravity System, Pumped System, Combination Boiler, Pressurised System

FINISH
Brushed Bronze

COLLECTION NAME
Axbridge

STYLE
Traditional, Cross Handles

DECK HOLE DRILL DIAMETER
22mm

DRILL HOLE CENTRES
200mm (Min: 165mm, Max: 235mm)

SPARE PARTS
Hot ceramic cartridge FL-501-LTCcold ceramic cartridge FL-501-RTC

CONNECTIONS / FITTINGS
2 x 1/2" threaded inlet

tel: 01934 744466
email: sales@vado.com
www.vado.com

WHERE INSPIRATION FLOWS

TAPS | SHOWERS | FURNITURE

VADO

SPECIFICATION SHEET

COLLECTION: AXBRIDGE
PRODUCT CODE: BC-AXB-153A-BRZ

WITH WATER FLOW AERATOR

No

WITH WATER FLOW STRAIGHTENER

Yes

MOUNTING

Pillar Mounted

MINIMUM OPERATING PRESSURE

0.2 Bar LP

MAXIMUM OPERATING PRESSURE

5.0 Bar HP

tel: 01934 744466
email: sales@vado.com
www.vado.com

WHERE INSPIRATION FLOWS
TAPS | SHOWERS | FURNITURE

VADO

TECHNICAL DRAWING

COLLECTION: AXBRIDGE
PRODUCT CODE: BC-AXB-153A-BRZ

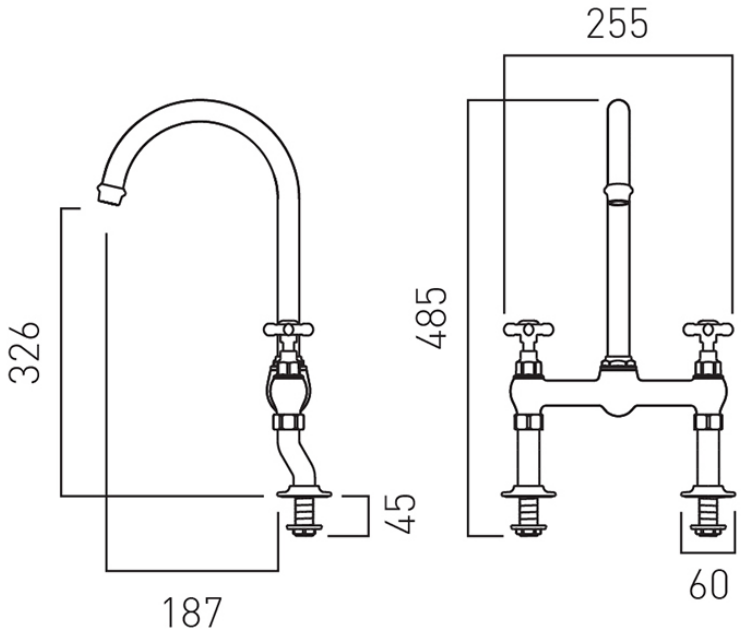

tel: 01934 744466
email: sales@vado.com
www.vado.com

WHERE INSPIRATION FLOWS
TAPS | SHOWERS | FURNITURE

VADO