SPECIFICATION SHEET

COLLECTION: AXBRIDGE
PRODUCT CODE: BC-AXB-181-BRZ



COLLECTION NAME
Axbridge

FINISH
Brushed Bronze

GUARANTEE
15 Year Guarantee

KIT COMPRISES
1 x Towel Ring

ACCESSORY TYPE
Towel Ring

MATERIAL
Brass

MOUNTING
Wall Mounted

STYLE
Traditional

tel: 01934 744466
email: sales@vado.com
www.vado.com

WHERE INSPIRATION FLOWS
TAPS | SHOWERS | FURNITURE

VADO

TECHNICAL DRAWING

COLLECTION: AXBRIDGE
PRODUCT CODE: BC-AXB-181-BRZ

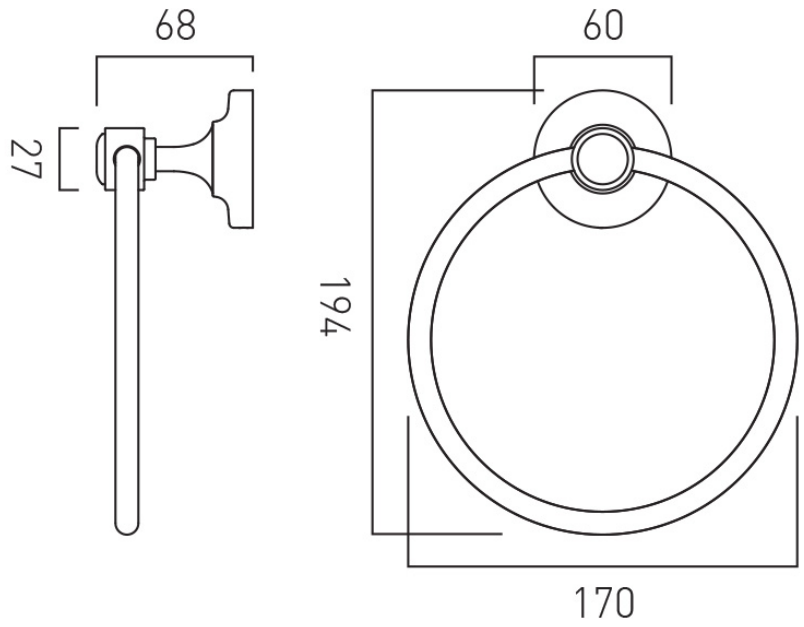

tel: 01934 744466
email: sales@vado.com
www.vado.com

WHERE INSPIRATION FLOWS
TAPS | SHOWERS | FURNITURE

VADO