SPECIFICATION SHEET

COLLECTION: AXBRIDGE
PRODUCT CODE: BC-AXB-148-BRZ



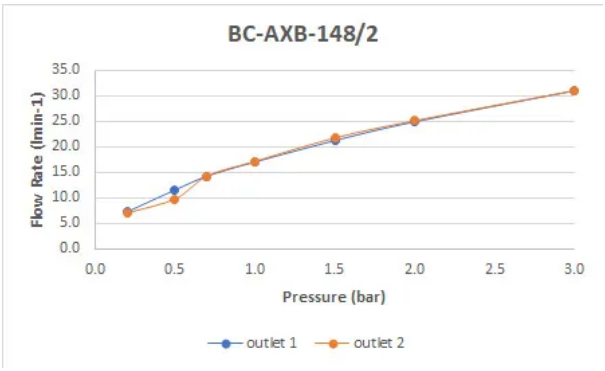

The flow rate displayed is calculated using ideal system conditions. This result should only be taken as an indication as the flow rate may vary depending on the specific in-situ configuration.

SHOWER TYPE
Shower Valve

VALVE TYPE
Concealed

STYLE
Traditional

ORIENTATION
Vertical

NUMBER OF OUTLETS
1 Outlet

HANDLES
2 Handle

WITH ALL-FLOW FUNCTION
No

WITH INTEGRATED DIVERTER
No

COMPATIBLE WITH STUDFAST
No

tel: 01934 744466
email: sales@vado.com
www.vado.com

WHERE INSPIRATION FLOWS
TAPS | SHOWERS | FURNITURE

VADO

SPECIFICATION SHEET

COLLECTION: AXBRIDGE
PRODUCT CODE: BC-AXB-148-BRZ

WITH BLEED VALVE FOR SYSTEM FLUSH ON INSTALLATION

No

WITH SHOWER KIT

No

INCLUDES MORTAR / TILE GUARD

Yes

COMPATIBLE WITH EASY-FIX BRACKETS

No

WITH THERMOSTATIC TECHNOLOGY

Yes

INSTALLATION TOLERANCES

Min-max wall mount 75-100mm

CONNECTIONS / FITTINGS

2 x 3/4" female inlets 2 x 3/4" female outlets

SPARE PARTS

Thermostatic cartridge V-701-34Sdiverter cartridge 1 x FL-805-33/2X

MOUNTING

Wall Mounted

PLUMBING SYSTEM SUITABILITY

Gravity System, Pumped System, Combination Boiler, Pressurised System

COLLECTION NAME

Axbridge

FINISH

Brushed Bronze

tel: 01934 744466
email: sales@vado.com
www.vado.com

WHERE INSPIRATION FLOWS
TAPS | SHOWERS | FURNITURE
VADO

SPECIFICATION SHEET

COLLECTION: AXBRIDGE
PRODUCT CODE: BC-AXB-148-BRZ

MINIMUM OPERATING PRESSURE

0.2 Bar LP (Shower) / 1.0 Bar MP (Bath)

MAXIMUM OPERATING PRESSURE

5.0 Bar HP

GUARANTEE

15 Year Guarantee

tel: 01934 744466
email: sales@vado.com
www.vado.com

WHERE INSPIRATION FLOWS
TAPS | SHOWERS | FURNITURE

VADO

TECHNICAL DRAWING

COLLECTION: AXBRIDGE
PRODUCT CODE: BC-AXB-148-BRZ

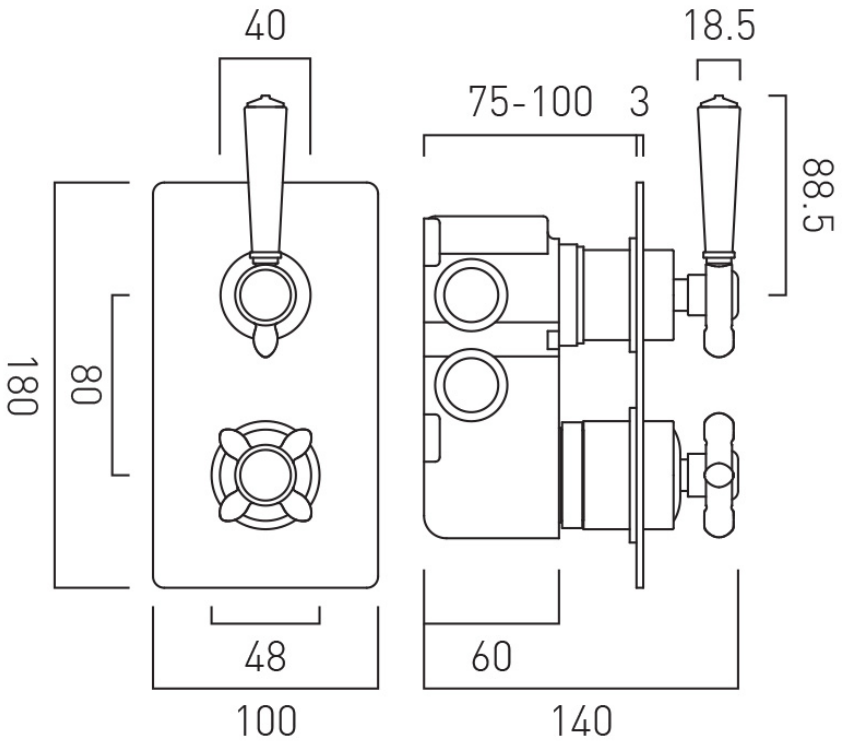

tel: 01934 744466
email: sales@vado.com
www.vado.com

WHERE INSPIRATION FLOWS
TAPS | SHOWERS | FURNITURE

VADO