SPECIFICATION SHEET

COLLECTION: AXBRIDGE
PRODUCT CODE: BC-AXB-220-BRZ



TAP TYPE
Bath Shower Mixers

PLUMBING SYSTEM SUITABILITY
Pumped System, Combination Boiler, Pressurised System

MOUNTING
Wall Mounted

WITH INTEGRATED DIVERTER
No

WITH EASY-FIT BRACKETS
Yes

WITH SHOWER KIT
Yes

WITH THERMOSTATIC TECHNOLOGY
No

FOR USE WITH BATH FILLER WASTE AND OVERFLOW
No

MINIMUM OPERATING PRESSURE
1.0 Bar MP

tel: 01934 744466
email: sales@vado.com
www.vado.com

WHERE INSPIRATION FLOWS

TAPS | SHOWERS | FURNITURE

SPECIFICATION SHEET

COLLECTION: AXBRIDGE
PRODUCT CODE: BC-AXB-220-BRZ

MAXIMUM OPERATING PRESSURE

5.0 Bar HP

WITH BATH SPOUT

No

WITH AIR-INJECTION TECHNOLOGY

No

WITH WATER FLOW STRAIGHTENER

Yes

WITH WATER FLOW AERATOR

No

SPARE PARTS

Cold ceramic cartridge FL-511-RTChot ceramic cartridge FL-511-LTC

STYLE

Traditional, Lever Handles

FINISH

Brushed Bronze

COLLECTION NAME

Axbridge

GUARANTEE

15 Year Guarantee

tel: 01934 744466
email: sales@vado.com
www.vado.com

TECHNICAL DRAWING

COLLECTION: AXBRIDGE
PRODUCT CODE: BC-AXB-220-BRZ

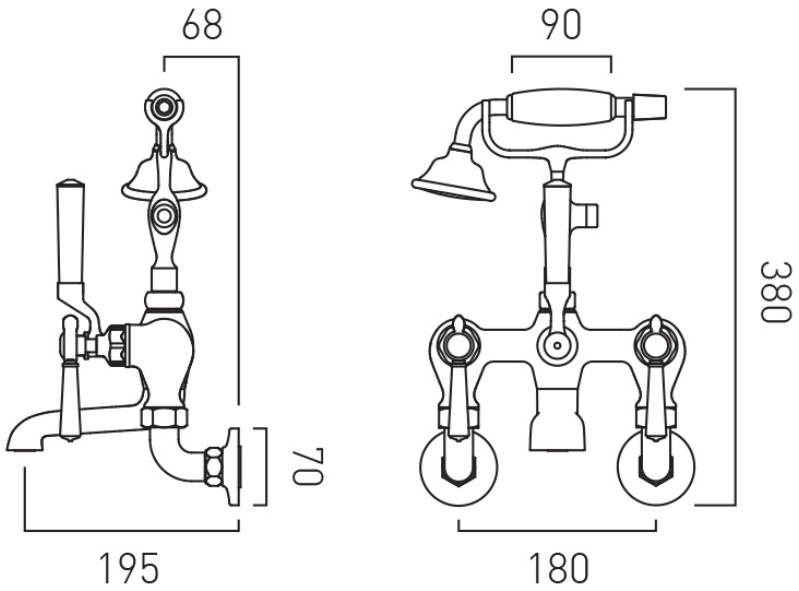

tel: 01934 744466
email: sales@vado.com
www.vado.com

WHERE INSPIRATION FLOWS
TAPS | SHOWERS | FURNITURE

VADO