SPECIFICATION SHEET

COLLECTION: AXBRIDGE
PRODUCT CODE: BC-AXB-137-BRZ



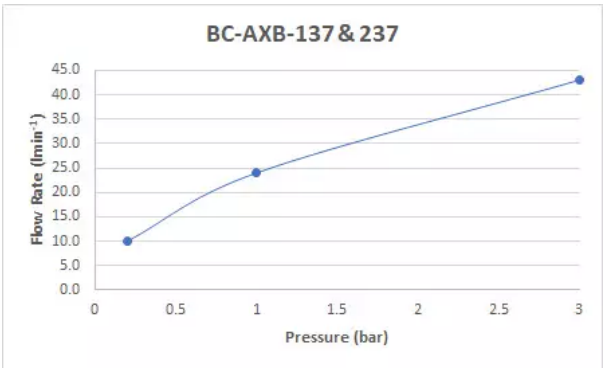

The flow rate displayed is calculated using ideal system conditions. This result should only be taken as an indication as the flow rate may vary depending on the specific in-situ configuration.

TAP TYPE
Bath Fillers

PLUMBING SYSTEM SUITABILITY
Pumped System, Combination Boiler, Pressurised System

MOUNTING
Deck Mounted

WITH WATER FLOW STRAIGHTENER
Yes

CONNECTIONS / FITTINGS
2 x 3/4" 45mm male threaded connections

DECK HOLE DRILL DIAMETER
27mm

MINIMUM OPERATING PRESSURE
1.0 Bar MP

MAXIMUM OPERATING PRESSURE
5.0 Bar HP

SPARE PARTS
Cold ceramic cartridge FL-511-RTChot ceramic cartridge FL-511-LTC

tel: 01934 744466
email: sales@vado.com
www.vado.com

WHERE INSPIRATION FLOWS
TAPS | SHOWERS | FURNITURE

SPECIFICATION SHEET

COLLECTION: AXBRIDGE
PRODUCT CODE: BC-AXB-137-BRZ

STYLE

Traditional, Cross Handles

FINISH

Brushed Bronze

COLLECTION NAME

Axbridge

GUARANTEE

15 Year Guarantee

tel: 01934 744466
email: sales@vado.com
www.vado.com

WHERE INSPIRATION FLOWS

TAPS | SHOWERS | FURNITURE

VADO

TECHNICAL DRAWING

COLLECTION: AXBRIDGE
PRODUCT CODE: BC-AXB-137-BRZ

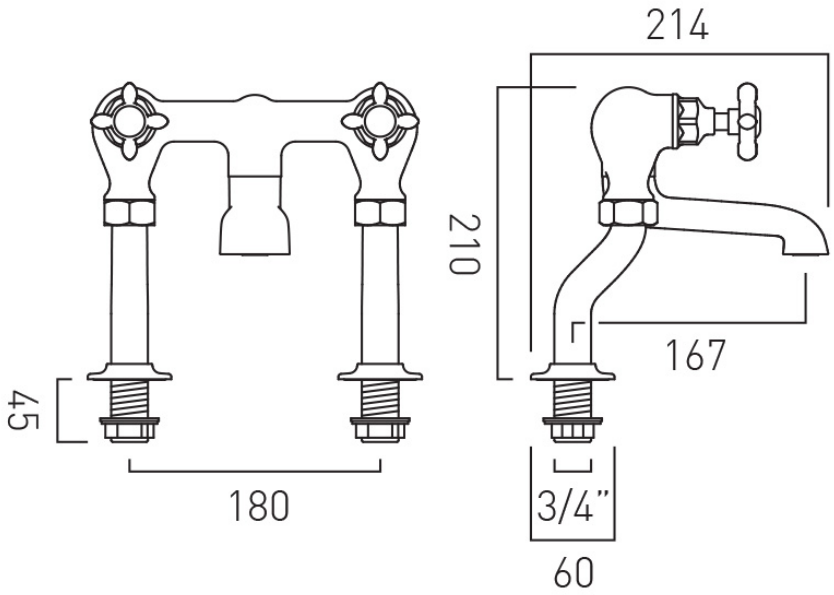

tel: 01934 744466
email: sales@vado.com
www.vado.com

WHERE INSPIRATION FLOWS
TAPS | SHOWERS | FURNITURE

VADO