SPECIFICATION SHEET

COLLECTION: AXBRIDGE
PRODUCT CODE: BC-AXB-253A-BRN



TAP TYPE
Kitchen Taps

PLUMBING SYSTEM SUITABILITY
Gravity System, Pumped System, Combination Boiler, Pressurised System

FINISH
Brushed Nickel

COLLECTION NAME
Axbridge

STYLE
Traditional, Lever Handles

DECK HOLE DRILL DIAMETER
22mm

SPARE PARTS
Hot ceramic cartridge FL-501-LTCcold ceramic cartridge FL-501-RTC

CONNECTIONS / FITTINGS
2 x 1/2" threaded inlet

WITH WATER FLOW AERATOR
No

tel: 01934 744466
email: sales@vado.com
www.vado.com

WHERE INSPIRATION FLOWS
TAPS | SHOWERS | FURNITURE
VADO

SPECIFICATION SHEET

COLLECTION: AXBRIDGE
PRODUCT CODE: BC-AXB-253A-BRN

WITH WATER FLOW STRAIGHTENER

Yes

MOUNTING

Pillar Mounted

MINIMUM OPERATING PRESSURE

0.2 Bar LP

MAXIMUM OPERATING PRESSURE

5.0 Bar HP

tel: 01934 744466
email: sales@vado.com
www.vado.com

WHERE INSPIRATION FLOWS
TAPS | SHOWERS | FURNITURE

VADO

TECHNICAL DRAWING

COLLECTION: AXBRIDGE
PRODUCT CODE: BC-AXB-253A-BRN

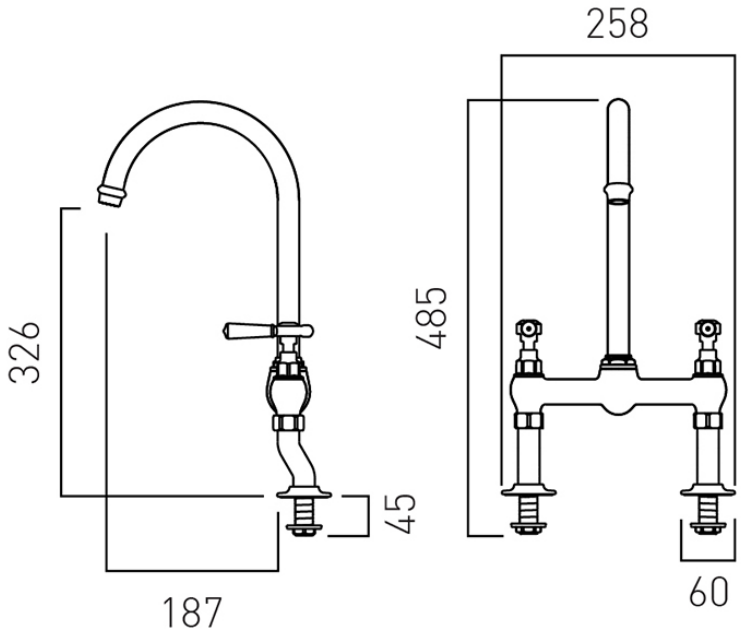

tel: 01934 744466
email: sales@vado.com
www.vado.com

WHERE INSPIRATION FLOWS
TAPS | SHOWERS | FURNITURE

VADO