SPECIFICATION SHEET

COLLECTION: AXBRIDGE
PRODUCT CODE: BC-AXB-233A-BRN



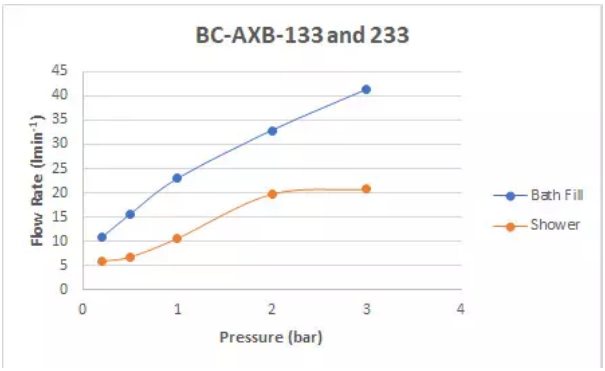

The flow rate displayed is calculated using ideal system conditions. This result should only be taken as an indication as the flow rate may vary depending on the specific in-situ configuration.

TAP TYPE
Bath Shower Mixers

PLUMBING SYSTEM SUITABILITY
Pumped System, Combination Boiler, Pressurised System

MOUNTING
Floor Mounted

WITH INTEGRATED DIVERTER
No

WITH EASY-FIT BRACKETS
No

WITH SHOWER KIT
Yes

WITH THERMOSTATIC TECHNOLOGY
No

FOR USE WITH BATH FILLER WASTE AND OVERFLOW
No

MINIMUM OPERATING PRESSURE
1.0 Bar MP

tel: 01934 744466
email: sales@vado.com
www.vado.com

WHERE INSPIRATION FLOWS

TAPS | SHOWERS | FURNITURE

VADO

SPECIFICATION SHEET

COLLECTION: AXBRIDGE
PRODUCT CODE: BC-AXB-233A-BRN

MAXIMUM OPERATING PRESSURE

5.0 Bar HP

WITH BATH SPOUT

No

WITH AIR-INJECTION TECHNOLOGY

No

WITH WATER FLOW STRAIGHTENER

Yes

WITH WATER FLOW AERATOR

No

CONNECTIONS / FITTINGS

2 x 3/4" female threaded connections

SPARE PARTS

Cold ceramic cartridge FL-511-RTChot ceramic cartridge FL-511-LTC

STYLE

Traditional, Lever Handles

FINISH

Brushed Nickel

COLLECTION NAME

Axbridge

GUARANTEE

15 Year Guarantee

tel: 01934 744466
email: sales@vado.com
www.vado.com

WHERE INSPIRATION FLOWS
TAPS | SHOWERS | FURNITURE

VADO

TECHNICAL DRAWING

COLLECTION: AXBRIDGE
PRODUCT CODE: BC-AXB-233A-BRN

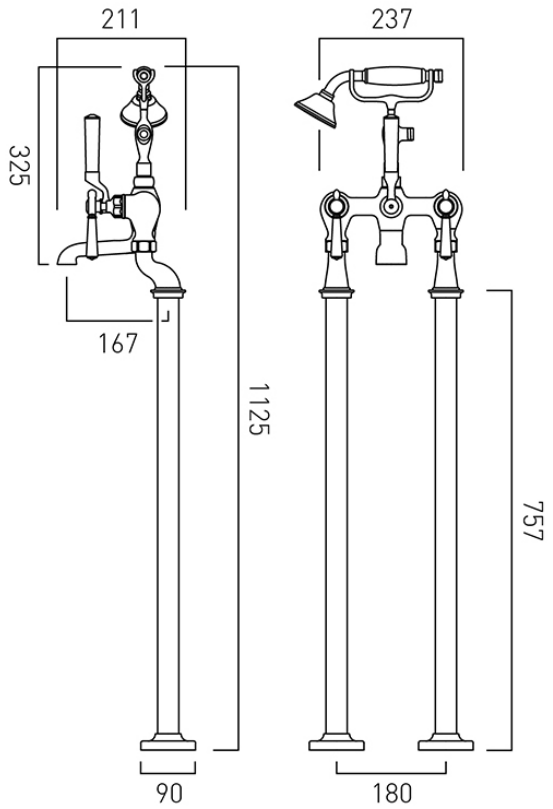

tel: 01934 744466
email: sales@vado.com
www.vado.com

WHERE INSPIRATION FLOWS
TAPS | SHOWERS | FURNITURE

VADO