SPECIFICATION SHEET

COLLECTION: SAFARI
PRODUCT CODE: SAF-231T+K-PEW



SHOWER TYPE
Shower Packages

COLLECTION NAME
Safari

FINISH
Pewter

MINIMUM OPERATING PRESSURE
1.0 Bar MP

MAXIMUM OPERATING PRESSURE
5.0 Bar HP

GUARANTEE
10 Year Guarantee

PLUMBING SYSTEM SUITABILITY
Pumped System, Combination Boiler, Pressurised System

DECK HOLE DRILL DIAMETER
28-35mm

SPARE PARTS
Thermostatic cartridge: V-704-34S. Diverter cartridge: C-801-33/2P

tel: 01934 744466
email: sales@vado.com
www.vado.com

WHERE INSPIRATION FLOWS

TAPS | SHOWERS | FURNITURE

SPECIFICATION SHEET

COLLECTION: SAFARI
PRODUCT CODE: SAF-231T+K-PEW

CONNECTIONS / FITTINGS
Bath Shower Mixer: 2x 3/4" 50mm threaded connection on legs

WITH AIR-INJECTION TECHNOLOGY
No

SHOWER PACKAGE DESCRIPTION
Leverless Deck Mounted Exposed Thermostatic Bath Shower Mixer (SAF-231T-PEW)
Single-Function Mini Kit (SAF-SFMK-PEW)

KIT COMPRISES
1 x Bath Shower Mixer Tap, 1 x Single-Function Mini Kit

WITH THERMOSTATIC TECHNOLOGY
Yes

NUMBER OF OUTLETS
2 Outlet

VALVE TYPE
Exposed

INCLUDES MORTAR / TILE GUARD
No

WITH BLEED VALVE FOR SYSTEM FLUSH ON INSTALLATION
No

COMPATIBLE WITH STUDFAST
No

ADJUSTABLE FIXING FOR EASY RETRO FIT
No

tel: 01934 744466
email: sales@vado.com
www.vado.com

TECHNICAL DRAWING

COLLECTION: SAFARI
PRODUCT CODE: SAF-231T+K-PEW

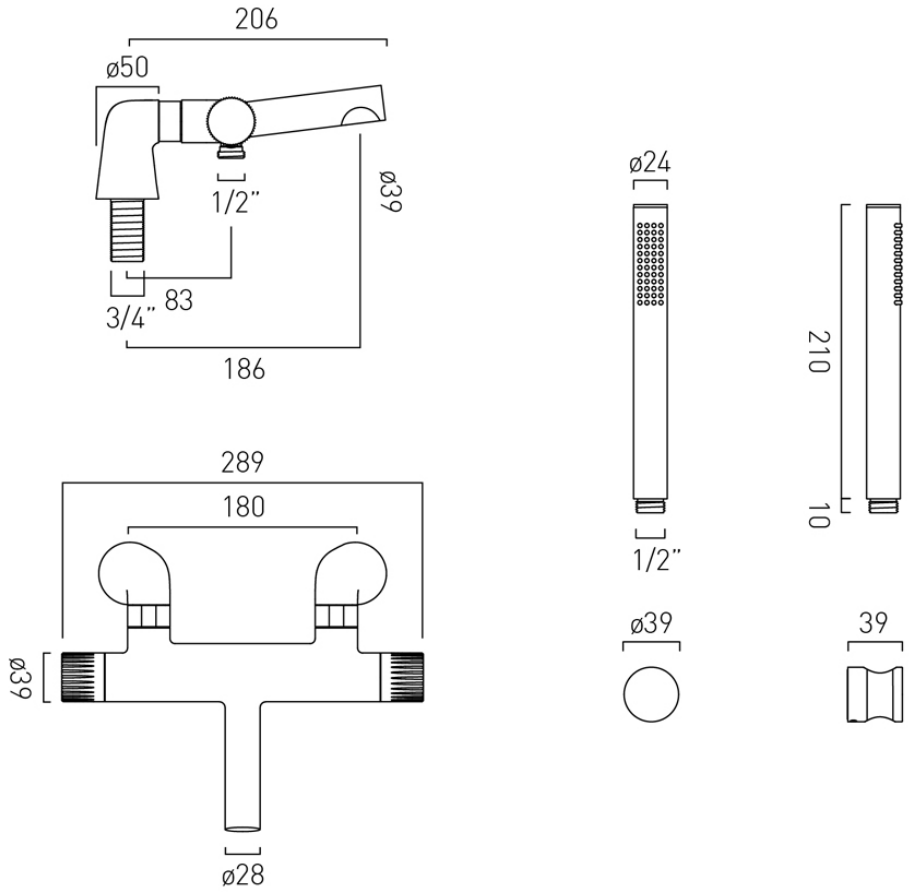

tel: 01934 744466
email: sales@vado.com
www.vado.com

WHERE INSPIRATION FLOWS
TAPS | SHOWERS | FURNITURE

VADO