SPECIFICATION SHEET

COLLECTION: SAFARI
PRODUCT CODE: SAF-231T+SFSRK-PEW

WINNER
Ideal Home AWARDS 2026
BATHROOM

SHOWER TYPE
Shower Packages

COLLECTION NAME
Safari

FINISH
Pewter

MINIMUM OPERATING PRESSURE
1.0 Bar MP

MAXIMUM OPERATING PRESSURE
5.0 Bar HP

GUARANTEE
10 Year Guarantee

PLUMBING SYSTEM SUITABILITY
Pumped System, Combination Boiler, Pressurised System

DECK HOLE DRILL DIAMETER
28-35mm

SPARE PARTS
Thermostatic cartridge: V-704-34S. Diverter cartridge: C-801-33/2P

tel: 01934 744466
email: sales@vado.com
www.vado.com

WHERE INSPIRATION FLOWS
TAPS | SHOWERS | FURNITURE

VADO

SPECIFICATION SHEET

COLLECTION: SAFARI
PRODUCT CODE: SAF-231T+SFSRK-PEW

CONNECTIONS / FITTINGS

Bath Shower Mixer: 2x 3/4" 50mm threaded connection on legs

WITH AIR-INJECTION TECHNOLOGY

No

SHOWER PACKAGE DESCRIPTION

Leverless Deck Mounted Exposed Thermostatic Bath Shower Mixer (SAF-231T-PEW)
Single-Function Slide Rail Kit (SAF-SFSRK-PEW)

KIT COMPRISES

1 x Bath Shower Mixer Tap, 1 x Single-Function Slide Rail Kit

WITH THERMOSTATIC TECHNOLOGY

Yes

NUMBER OF OUTLETS

2 Outlet

VALVE TYPE

Exposed

INCLUDES MORTAR / TILE GUARD

No

WITH BLEED VALVE FOR SYSTEM FLUSH ON INSTALLATION

No

COMPATIBLE WITH STUDFAST

No

ADJUSTABLE FIXING FOR EASY RETRO FIT

No

tel: 01934 744466
email: sales@vado.com
www.vado.com

TECHNICAL DRAWING

COLLECTION: SAFARI
PRODUCT CODE: SAF-231T+SFSRK-PEW

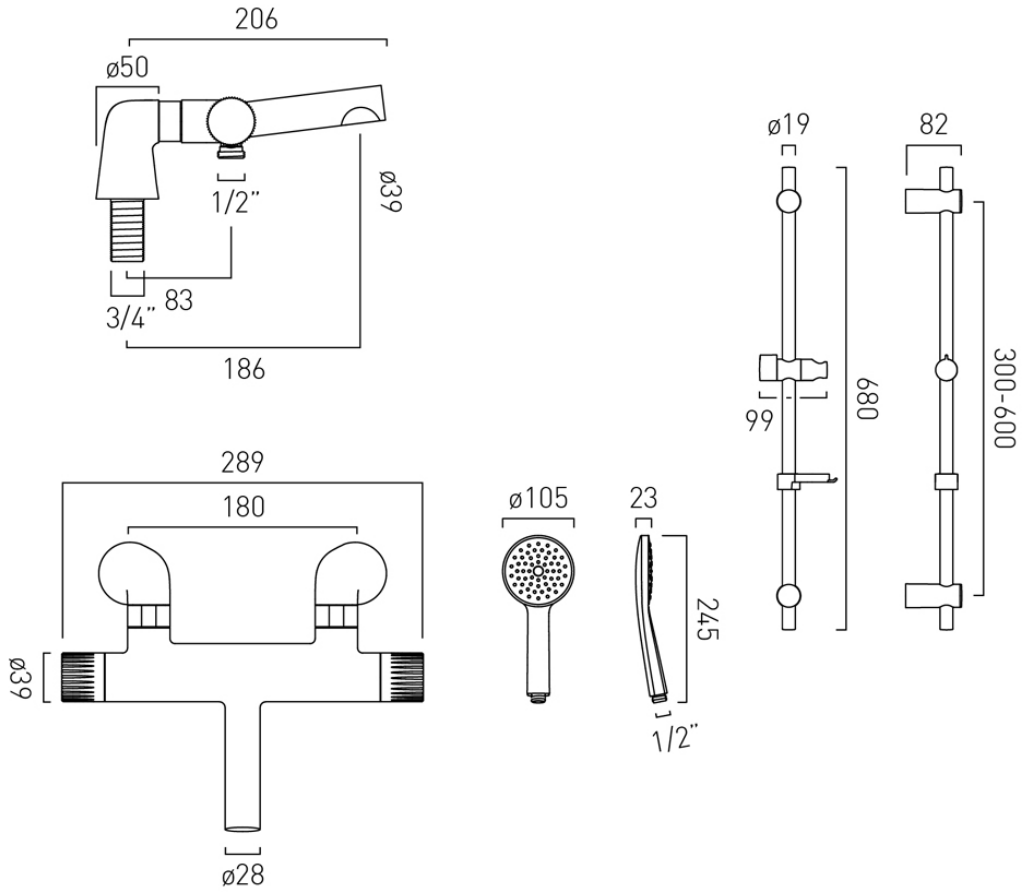

tel: 01934 744466
email: sales@vado.com
www.vado.com

WHERE INSPIRATION FLOWS
TAPS | SHOWERS | FURNITURE

VADO