SPECIFICATION SHEET

COLLECTION: SAFARI
PRODUCT CODE: DX-272251-SAF-PEW



SHOWER TYPE
Shower Packages

COLLECTION NAME
Safari

FINISH
Pewter

MINIMUM OPERATING PRESSURE
0.2 Bar LP

MAXIMUM OPERATING PRESSURE
5.0 Bar HP

GUARANTEE
10 Year Guarantee

PLUMBING SYSTEM SUITABILITY
Gravity System, Pumped System, Combination Boiler, Pressurised System

SPARE PARTS
Thermostatic cartridge: V-704-34S. Diverter cartridge: C-803-33X/3X

CONNECTIONS / FITTINGS
Valve: 2 x 3/4" female inlets, 2 x 3/4" female. Head: 1/2" female inlet. Mini kit: 1/2" male 51mm threaded inlet connection

tel: 01934 744466
email: sales@vado.com
www.vado.com

WHERE INSPIRATION FLOWS
TAPS | SHOWERS | FURNITURE

VADO

SPECIFICATION SHEET

COLLECTION: SAFARI
PRODUCT CODE: DX-272251-SAF-PEW

WITH AIR-INJECTION TECHNOLOGY
No

SHOWER PACKAGE DESCRIPTION
Lever 2 Outlet Concealed Thermostatic Shower Valve (SAF-248D/2-PEW)
260mm (10") Rainfall Shower Head (SAF-HEAD-260-PEW)
Easy-Fit Shower Arm (SAF-EFSA-PEW)
Mini Kit with Pencil Handset, 150cm Hose, Bracket and Integrated Outlet (SAF-SFMKW0-PEW)

KIT COMPRISES
1 x Shower Valve, 1 x Shower Head, 1 x Shower Arm, 1 x Mini Shower Kit

WITH THERMOSTATIC TECHNOLOGY
Yes

NUMBER OF OUTLETS
2 Outlet

VALVE TYPE
Concealed

INCLUDES MORTAR / TILE GUARD
No

WITH BLEED VALVE FOR SYSTEM FLUSH ON INSTALLATION
No

COMPATIBLE WITH STUDFAST
No

ADJUSTABLE FIXING FOR EASY RETRO FIT
No

tel: 01934 744466
email: sales@vado.com
www.vado.com

TECHNICAL DRAWING

COLLECTION: SAFARI
PRODUCT CODE: DX-272251-SAF-PEW

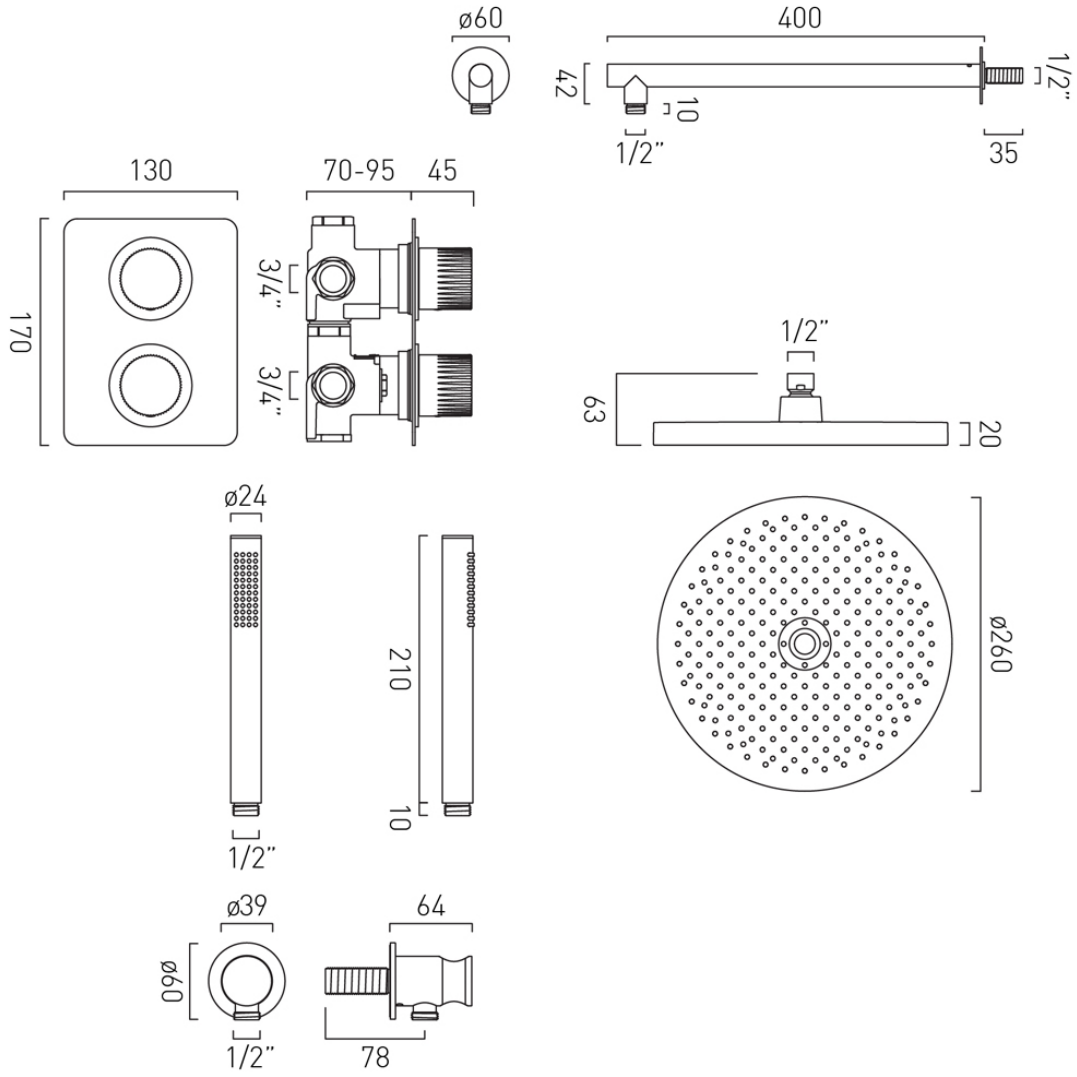

tel: 01934 744466
email: sales@vado.com
www.vado.com

WHERE INSPIRATION FLOWS

TAPS | SHOWERS | FURNITURE

VADO