SPECIFICATION SHEET

COLLECTION: CAMEO
PRODUCT CODE: CAM-F600-EG



COLLECTION NAME
Cameo

FURNITURE TYPE
Vanity Unit

FINISH
Eucalyptus Green

SIZE
600mm

MOUNTING
Wall Mounted

DRAWERS
2 Drawers

OPENING MECHANISM
Standard Handle (Not Included)

DRAWER/DOOR MECHANISM
2 Quick Release, Soft Close Drawers

GUARANTEE
6 Year Guarantee

tel: 01934 744466
email: sales@vado.com
www.vado.com

WHERE INSPIRATION FLOWS
TAPS | SHOWERS | FURNITURE

VADO

SPECIFICATION SHEET

COLLECTION: CAMEO
PRODUCT CODE: CAM-F600-EG

BASIN SUITABILITY
Cameo, 600mm Basins

FIXING LOCATION
100mm from top of the unit Height adjustable wall brackets

SPACE SAVING SOLUTION
Bottle trap cutout in top drawer

NOTES
Use dimension from the chosen basin waste to align waste centres

tel: 01934 744466
email: sales@vado.com
www.vado.com

WHERE INSPIRATION FLOWS
TAPS | SHOWERS | FURNITURE

VADO

TECHNICAL DRAWING

COLLECTION: CAMEO
PRODUCT CODE: CAM-F600-EG

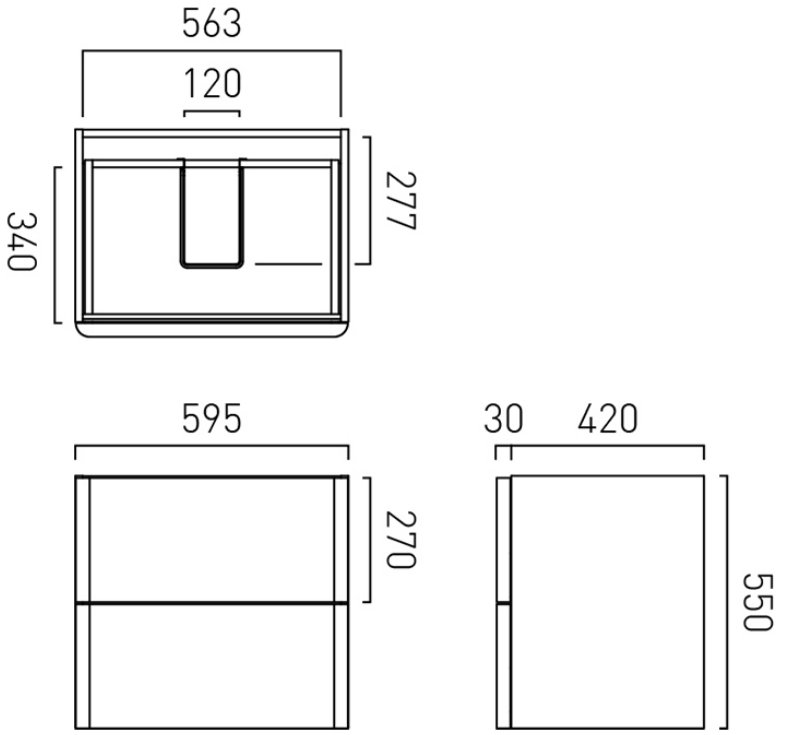

tel: 01934 744466
email: sales@vado.com
www.vado.com

WHERE INSPIRATION FLOWS
TAPS | SHOWERS | FURNITURE

VADO