SPECIFICATION SHEET

COLLECTION: GROOVE
PRODUCT CODE: GRV-F600WH-CW



COLLECTION NAME
Groove

FURNITURE TYPE
Vanity Unit

FINISH
Classic Walnut

SIZE
600mm

MOUNTING
Wall Mounted

DRAWERS
2 Drawers

HANDLES
Handleless

OPENING MECHANISM
Handleless (Pull-to-Open)

DRAWER/DOOR MECHANISM
2 Quick Release, Soft Close Drawers, Full-Extension Runners

tel: 01934 744466
email: sales@vado.com
www.vado.com

WHERE INSPIRATION FLOWS
TAPS | SHOWERS | FURNITURE

VADO

SPECIFICATION SHEET

COLLECTION: GROOVE
PRODUCT CODE: GRV-F600WH-CW

GUARANTEE
6 Year Guarantee

BASIN SUITABILITY
Groove

SPACE SAVING SOLUTION
Bottle trap cut out in top drawer, 67mm plumbing void

ASSEMBLY TYPE
Pre-Assembled

NOTES
Use dimensions from the chosen basin waste to align waste centres

tel: 01934 744466
email: sales@vado.com
www.vado.com

WHERE INSPIRATION FLOWS
TAPS | SHOWERS | FURNITURE

VADO

TECHNICAL DRAWING

COLLECTION: GROOVE
PRODUCT CODE: GRV-F600WH-CW

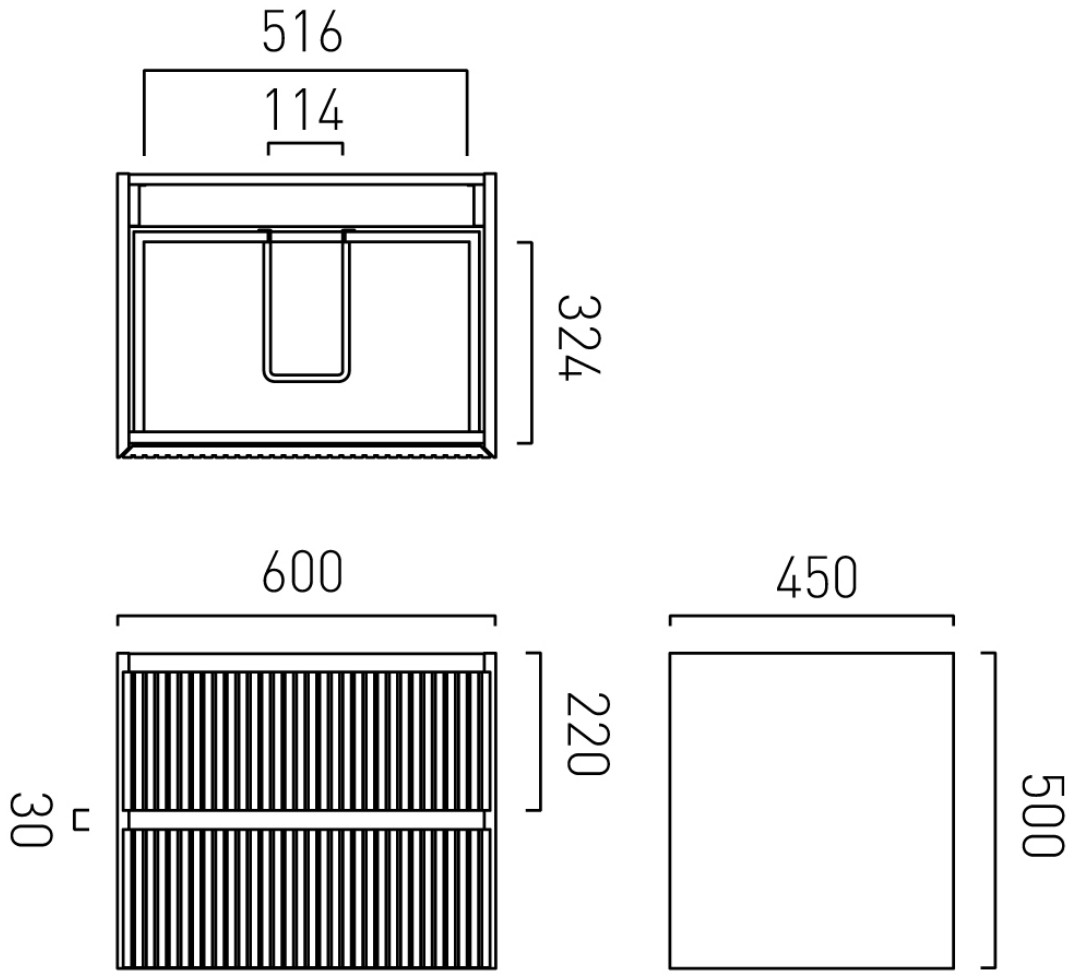

tel: 01934 744466
email: sales@vado.com
www.vado.com

WHERE INSPIRATION FLOWS
TAPS | SHOWERS | FURNITURE

VADO