SPECIFICATION SHEET

COLLECTION: STRATA
PRODUCT CODE: STRA-149RRK-CP



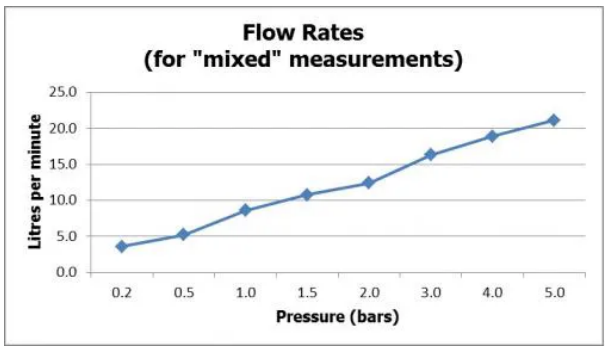

The flow rate displayed is calculated using ideal system conditions. This result should only be taken as an indication as the flow rate may vary depending on the specific in-situ configuration.

SHOWER TYPE
Shower Column

VALVE TYPE
Exposed

WITH AIR-INJECTION TECHNOLOGY
No

WITH EASY-FIT BRACKETS
No

WITH CROSS-SPRAY TECHNOLOGY
No

WITH INTEGRATED DIVERTER
No

ADJUSTABLE FIXING FOR EASY RETRO FIT
No

WITH THERMOSTATIC TECHNOLOGY
No

WITH SHOWER KIT
No

tel: 01934 744466
email: sales@vado.com
www.vado.com

WHERE INSPIRATION FLOWS
TAPS | SHOWERS | FURNITURE

VADO

SPECIFICATION SHEET

COLLECTION: STRATA
PRODUCT CODE: STRA-149RRK-CP

SHOWER PACKAGE DESCRIPTION

- thermostatic shower valve with integrated diverter and rigid riser
- glass topped valve doubles as a shelf
- Saturn 254mm (10") round shower head
- Nebula round 3 function shower handset
- easy-fit brackets included

WITH WATER FLOW STRAIGHTENER

No

SPARE PARTS

thermostatic cartridge V-703-34S flow cartridge STRA-002A-PLA

PLUMBING SYSTEM SUITABILITY

Pumped System, Combination Boiler, Pressurised System

COLLECTION NAME

Strata

FINISH

Chrome

MINIMUM OPERATING PRESSURE

1.0 Bar MP

MAXIMUM OPERATING PRESSURE

5.0 Bar HP

GUARANTEE

15 Year Guarantee

tel: 01934 744466
email: sales@vado.com
www.vado.com

TECHNICAL DRAWING

COLLECTION: STRATA
PRODUCT CODE: STRA-149RRK-CP

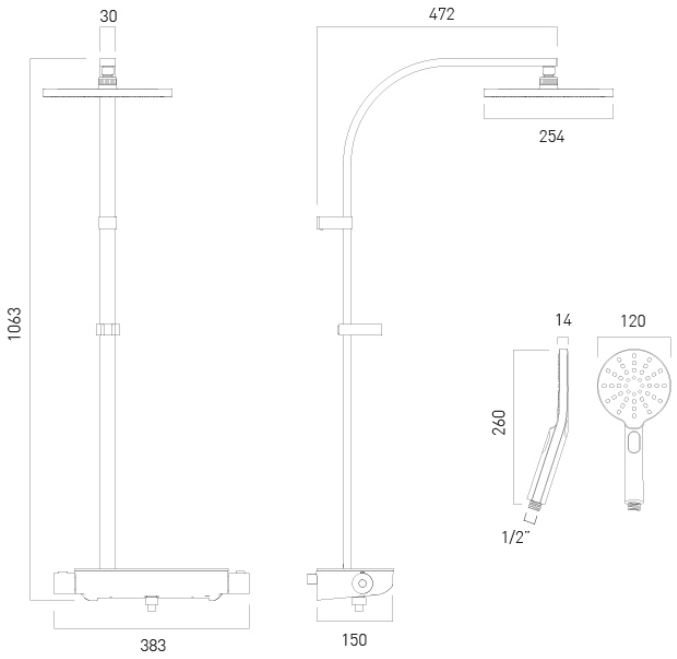

tel: 01934 744466
email: sales@vado.com
www.vado.com

WHERE INSPIRATION FLOWS

TAPS | SHOWERS | FURNITURE

VADO