SPECIFICATION SHEET

COLLECTION: CAMEO
PRODUCT CODE: CAM-F500-CB



COLLECTION NAME
Cameo

FURNITURE TYPE
Vanity Unit

FINISH
Cove Blue

VANITY WIDTH
500mm

MOUNTING
Wall Mounted

DRAWERS
2 Drawers

GUARANTEE
6 Year Guarantee

BASIN SUITABILITY
Cameo, 500mm Basins

FIXING LOCATION
100mm from top of unit

tel: 01934 744466
email: sales@vado.com
www.vado.com

WHERE INSPIRATION FLOWS
TAPS | SHOWERS | FURNITURE

VADO

SPECIFICATION SHEET

COLLECTION: CAMEO
PRODUCT CODE: CAM-F500-CB

SPACE SAVING SOLUTION

Bottle trap cut out in top drawer

NOTES

Use dimension from the chosen basin waste to align waste centres

tel: 01934 744466
email: sales@vado.com
www.vado.com

WHERE INSPIRATION FLOWS

TAPS | SHOWERS | FURNITURE

VADO

TECHNICAL DRAWING

COLLECTION: CAMEO
PRODUCT CODE: CAM-F500-CB

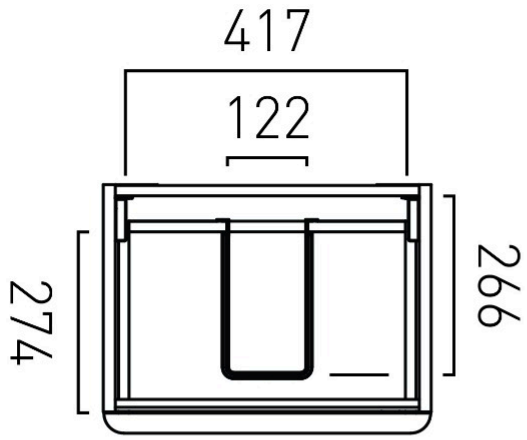

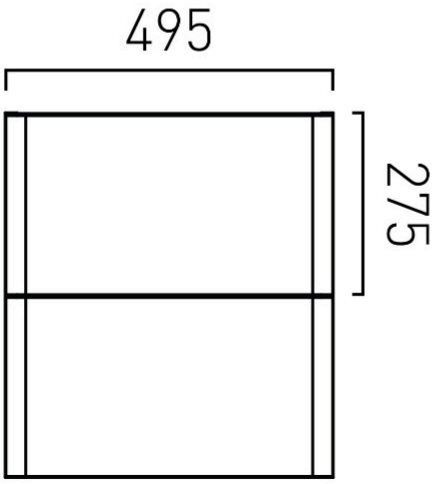

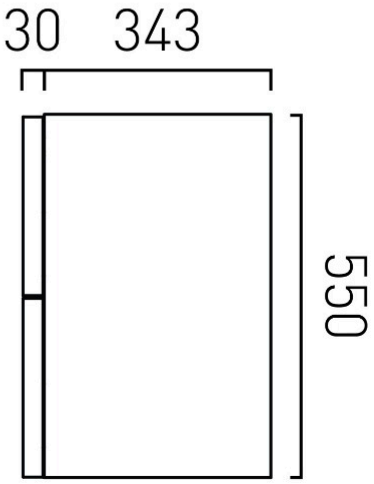

tel: 01934 744466
email: sales@vado.com
www.vado.com

WHERE INSPIRATION FLOWS
TAPS | SHOWERS | FURNITURE

VADO