SPECIFICATION SHEET

COLLECTION: CAMEO
PRODUCT CODE: CAM-BM5-PC



COLLECTION NAME
Cameo

FURNITURE TYPE
Inset Basin

BASIN TYPE
Inset Basin

BASIN WIDTH
500mm

FINISH
Pink Clay

SIZE
500mm

BASIN MATERIAL
Mineral Cast

GUARANTEE
6 Year Guarantee

OVERFLOW
Yes (Overflow Cover Not Included)

tel: 01934 744466
email: sales@vado.com
www.vado.com

WHERE INSPIRATION FLOWS
TAPS | SHOWERS | FURNITURE

VADO

SPECIFICATION SHEET

COLLECTION: CAMEO
PRODUCT CODE: CAM-BM5-PC

OVERFLOW COVER REQUIRED

Required: CAM-BMO

REPAIR KIT INCLUDED

Yes

tel: 01934 744466
email: sales@vado.com
www.vado.com

WHERE INSPIRATION FLOWS

TAPS | SHOWERS | FURNITURE

VADO

TECHNICAL DRAWING

COLLECTION: CAMEO
PRODUCT CODE: CAM-BM5-PC

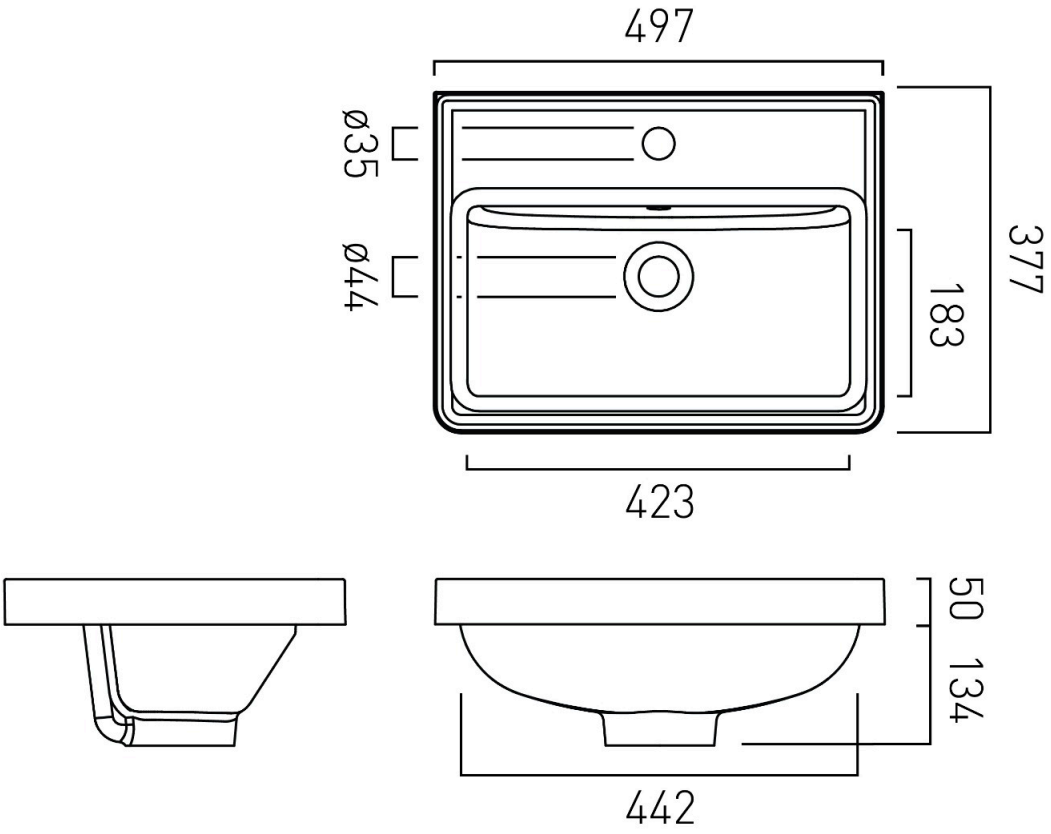

tel: 01934 744466
email: sales@vado.com
www.vado.com

WHERE INSPIRATION FLOWS
TAPS | SHOWERS | FURNITURE

VADO