SPECIFICATION SHEET

COLLECTION: SAFARI
PRODUCT CODE: SAF-SR2+SH-PEW



SHOWER TYPE
Slide Rails

FINISH
Pewter

COLLECTION NAME
Safari

MOUNTING
Wall Mounted

STYLE
Round

WITH TWIST CONTROL
Yes

ADJUSTABLE FIXING FOR EASY RETRO FIT
No

SLIDE RAIL LENGTH
600mm

HOSE
150cm smooth hose

tel: 01934 744466
email: sales@vado.com
www.vado.com

WHERE INSPIRATION FLOWS
TAPS | SHOWERS | FURNITURE

SPECIFICATION SHEET

COLLECTION: SAFARI
PRODUCT CODE: SAF-SR2+SH-PEW

GUARANTEE

10 Year Guarantee

tel: 01934 744466
email: sales@vado.com
www.vado.com

WHERE INSPIRATION FLOWS

TAPS | SHOWERS | FURNITURE

VADO

TECHNICAL DRAWING

COLLECTION: SAFARI
PRODUCT CODE: SAF-SR2+SH-PEW

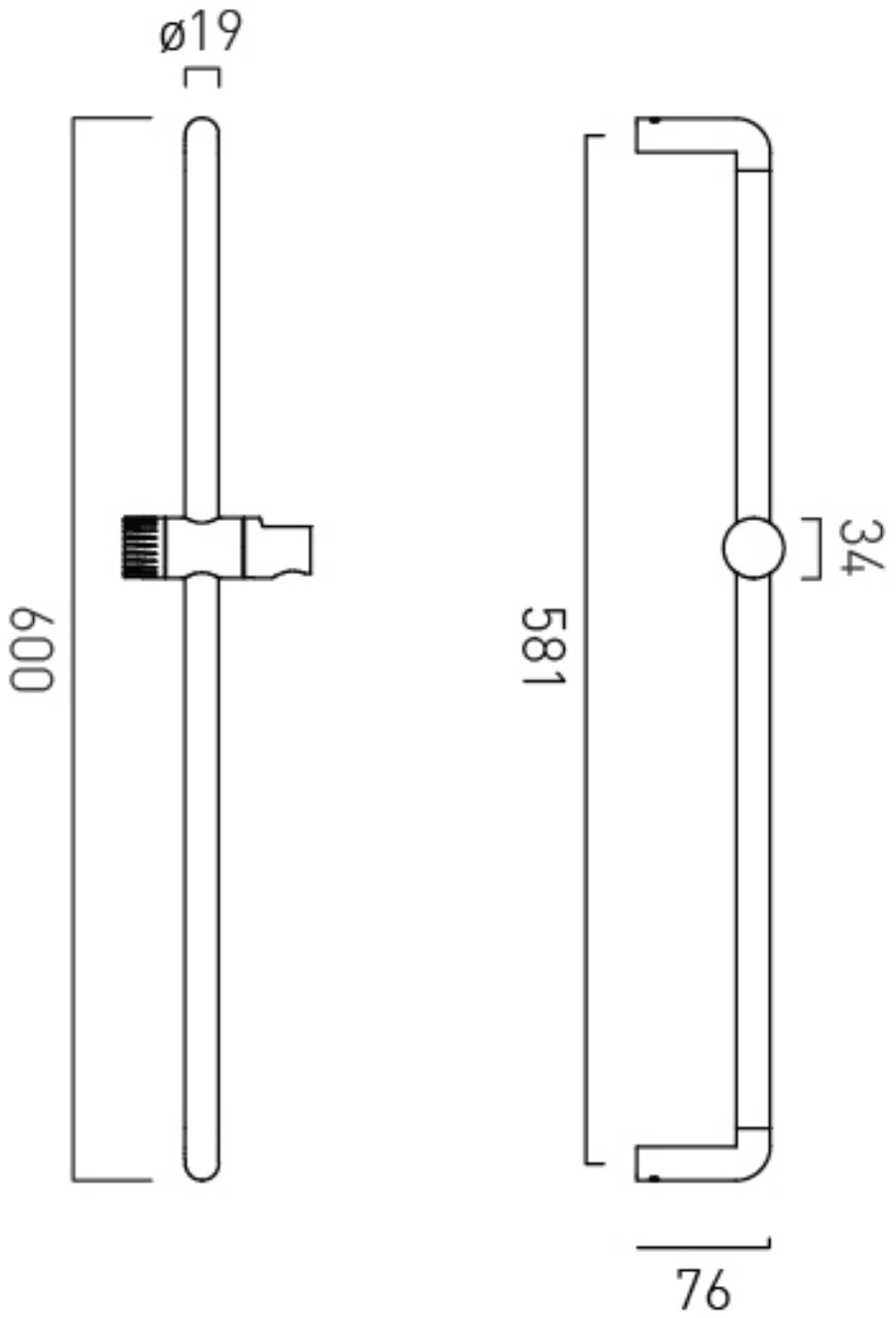

tel: 01934 744466
email: sales@vado.com
www.vado.com

WHERE INSPIRATION FLOWS
TAPS | SHOWERS | FURNITURE

VADO