SPECIFICATION SHEET

COLLECTION: SAFARI
PRODUCT CODE: SAF-HEAD-260-SBR

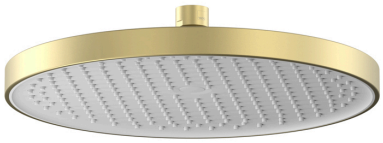

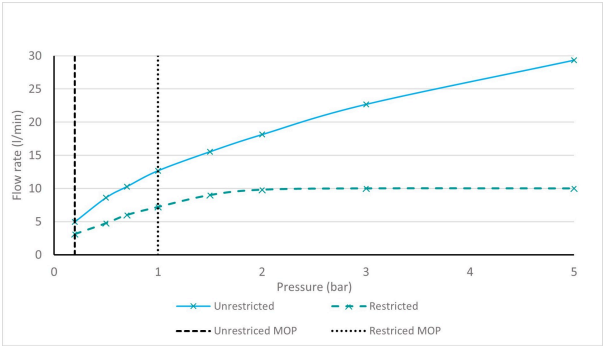

The flow rate displayed is calculated using ideal system conditions. This result should only be taken as an indication as the flow rate may vary depending on the specific in-situ configuration.

SHOWER TYPE
Shower Head

PLUMBING SYSTEM SUITABILITY
Gravity System, Pumped System, Combination Boiler, Pressurised System

STYLE
Round

CONNECTIONS / FITTINGS
1/2" female inlet

WITH AIR-INJECTION TECHNOLOGY
No

FUNCTIONS
Single Function

RUB-CLEAN NOZZLES
Yes

SELF-CLEANING
No

WITH SHOWER ARM
None

tel: 01934 744466
email: sales@vado.com
www.vado.com

WHERE INSPIRATION FLOWS
TAPS | SHOWERS | FURNITURE

SPECIFICATION SHEET

COLLECTION: SAFARI
PRODUCT CODE: SAF-HEAD-260-SBR

SHOWER HEAD SIZE

260mm (10")

MATERIAL

Brass

COLLECTION NAME

Safari

FINISH

Satin Brass

MINIMUM OPERATING PRESSURE

0.2 Bar LP

MAXIMUM OPERATING PRESSURE

5.0 Bar HP

GUARANTEE

10 Year Guarantee

tel: 01934 744466
email: sales@vado.com
www.vado.com

WHERE INSPIRATION FLOWS
TAPS | SHOWERS | FURNITURE

VADO

TECHNICAL DRAWING

COLLECTION: SAFARI
PRODUCT CODE: SAF-HEAD-260-SBR

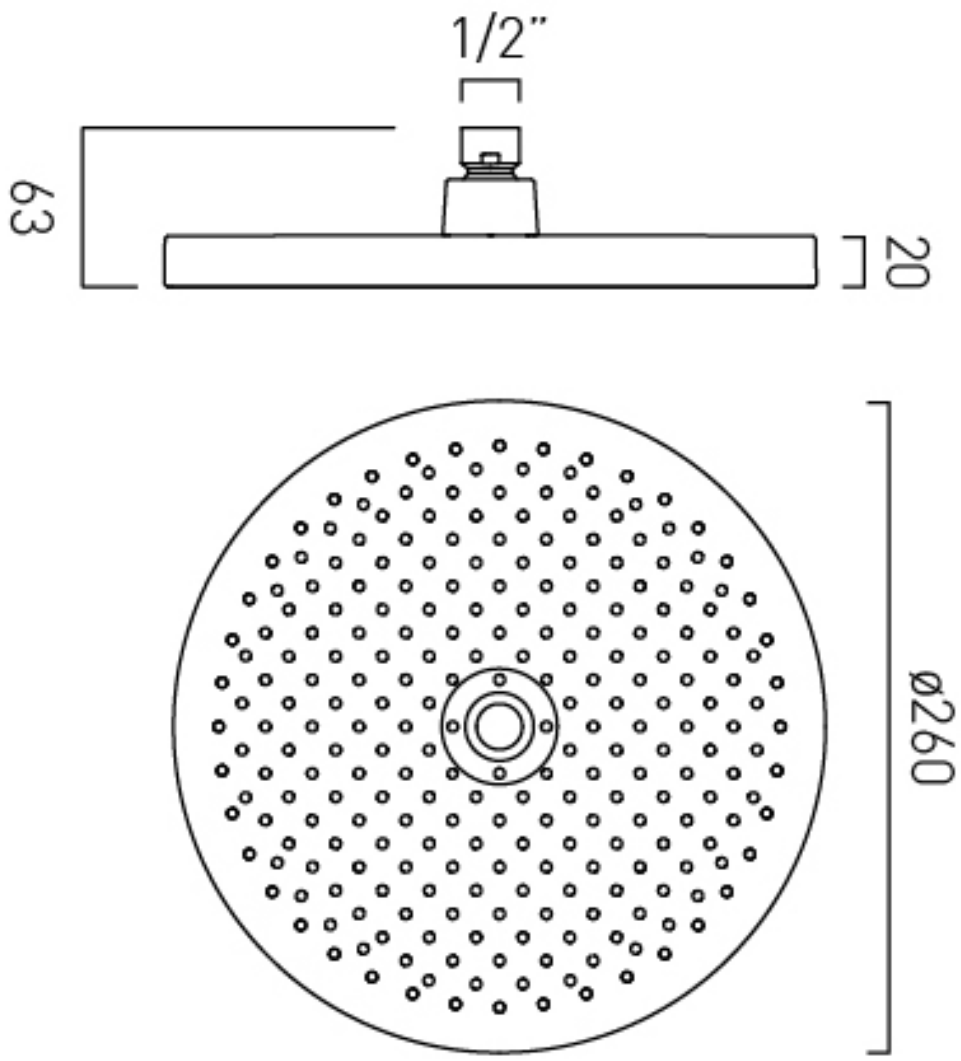

tel: 01934 744466
email: sales@vado.com
www.vado.com

WHERE INSPIRATION FLOWS
TAPS | SHOWERS | FURNITURE

VADO