# SPECIFICATION SHEET

## COLLECTION: DX CELSIUS
## PRODUCT CODE: DX-172251-CELRO-CP



### SHOWER TYPE
Shower Packages

### COLLECTION NAME
DX Celsius

### FINISH
Chrome

### MINIMUM OPERATING PRESSURE
0.2 Bar LP

### MAXIMUM OPERATING PRESSURE
5.0 Bar HP

### GUARANTEE
15 Year Guarantee

### PLUMBING SYSTEM SUITABILITY
Gravity System, Pumped System, Combination Boiler, Pressurised System

### SPARE PARTS
thermostatic cartridge V-704-34Sdiverter cartridge C-803-33X/3X

### CONNECTIONS / FITTINGS
2 x 3/4" female inlets 2 x 3/4" female outlets

tel: 01934 744466
email: sales@vado.com
www.vado.com

WHERE INSPIRATION FLOWS

TAPS | SHOWERS | FURNITURE

VADO

# SPECIFICATION SHEET

## COLLECTION: DX CELSIUS
## PRODUCT CODE: DX-172251-CELRO-CP

### INSTALLATION TOLERANCES
min-max wall mount 70-95mm optimum installation depth 82mm

### WITH AIR-INJECTION TECHNOLOGY
No

### SHOWER PACKAGE DESCRIPTION
- 2 outlet thermostatic shower valve
- Saturn 254mm head with shower arm
- Safari single function shower kit with integrated outlet and optional shroud

### KIT COMPRISES
CEL-148D/2/RO-C/P, WG-SATURN2/SA-C/P, SAF-SFMKWO-CP

### WITH THERMOSTATIC TECHNOLOGY
Yes

### NUMBER OF OUTLETS
2 Outlet

### VALVE TYPE
Concealed

### INCLUDES MORTAR / TILE GUARD
No

### WITH BLEED VALVE FOR SYSTEM FLUSH ON INSTALLATION
Yes

### COMPATIBLE WITH STUDFAST
Yes

### ADJUSTABLE FIXING FOR EASY RETRO FIT
No

tel: 01934 744466
email: sales@vado.com
www.vado.com

# TECHNICAL DRAWING

## COLLECTION: DX CELSIUS
## PRODUCT CODE: DX-172251-CELRO-CP

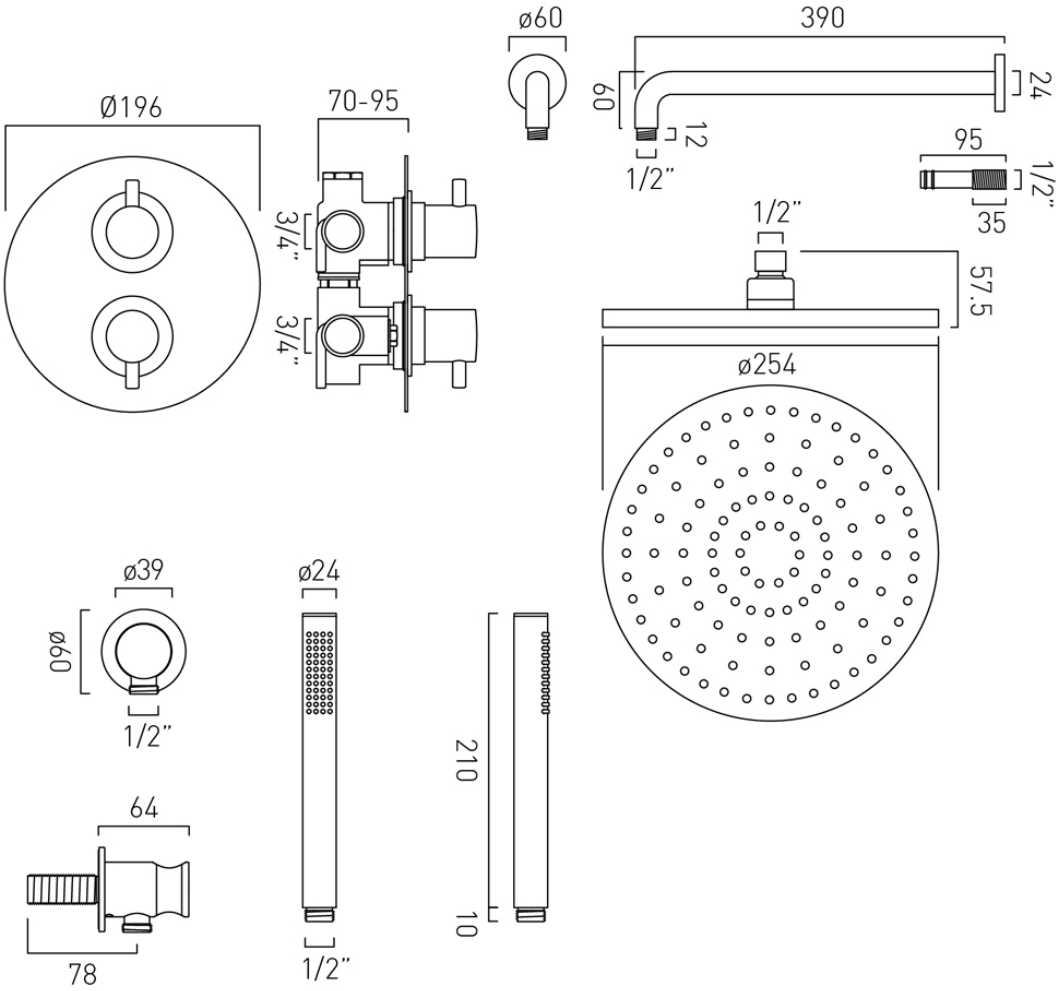


tel: 01934 744466
email: sales@vado.com
www.vado.com

WHERE INSPIRATION FLOWS

TAPS | SHOWERS | FURNITURE

VADO