SPECIFICATION SHEET

COLLECTION: SAFARI
PRODUCT CODE: SAF-102-PEW



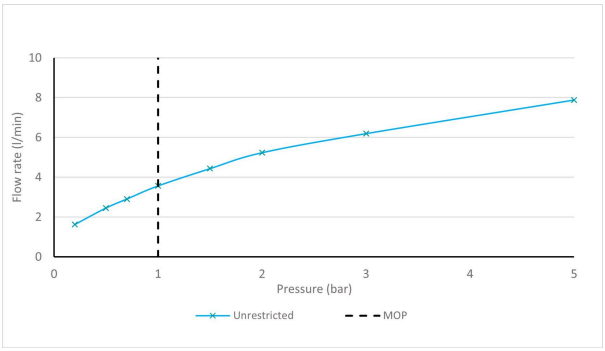

The flow rate displayed is calculated using ideal system conditions. This result should only be taken as an indication as the flow rate may vary depending on the specific in-situ configuration.

TAP TYPE
Basin Mixer Taps

FINISH
Pewter

COLLECTION NAME
Safari

GUARANTEE
10 Year Guarantee

PLUMBING SYSTEM SUITABILITY
Pumped System, Combination Boiler, Pressurised System

MINIMUM OPERATING PRESSURE
1.0 Bar MP

MAXIMUM OPERATING PRESSURE
5.0 Bar HP

MATERIAL
Brass

HANDLES
2 Handle

tel: 01934 744466
email: sales@vado.com
www.vado.com

WHERE INSPIRATION FLOWS
TAPS | SHOWERS | FURNITURE

VADO

SPECIFICATION SHEET

COLLECTION: SAFARI
PRODUCT CODE: SAF-102-PEW

MOUNTING

Deck Mounted

WASTE

None (Smooth Bodied)

RECOMMENDED FLOW REGULATOR

5l/m flow regulator as standard

WITH ECOTURN COLD START TECHNOLOGY

No

WITH WATER FLOW STRAIGHTENER

No

WITH SWIVEL SPOUT

with Swivel Spout

WITH WATER FLOW AERATOR

Yes

CONNECTIONS / FITTINGS

2 x 1/2" x 1/2" flexipipe connections. 2 x 1/2" male inlets.

WALL HOLE DRILL DIAMETER

Spout: 45-55mm. Handle: 40-50mm

DECK HOLE DRILL DIAMETER

Spout: 30mm. Valve: 30mm.

SPARE PARTS

Cold ceramic cartridge: C-206-RTC. Hot ceramic cartridge: C-206-LTC.

STYLE

Round, Lever Handles

tel: 01934 744466
email: sales@vado.com
www.vado.com

WHERE INSPIRATION FLOWS
TAPS | SHOWERS | FURNITURE

VADO

TECHNICAL DRAWING

COLLECTION: SAFARI
PRODUCT CODE: SAF-102-PEW

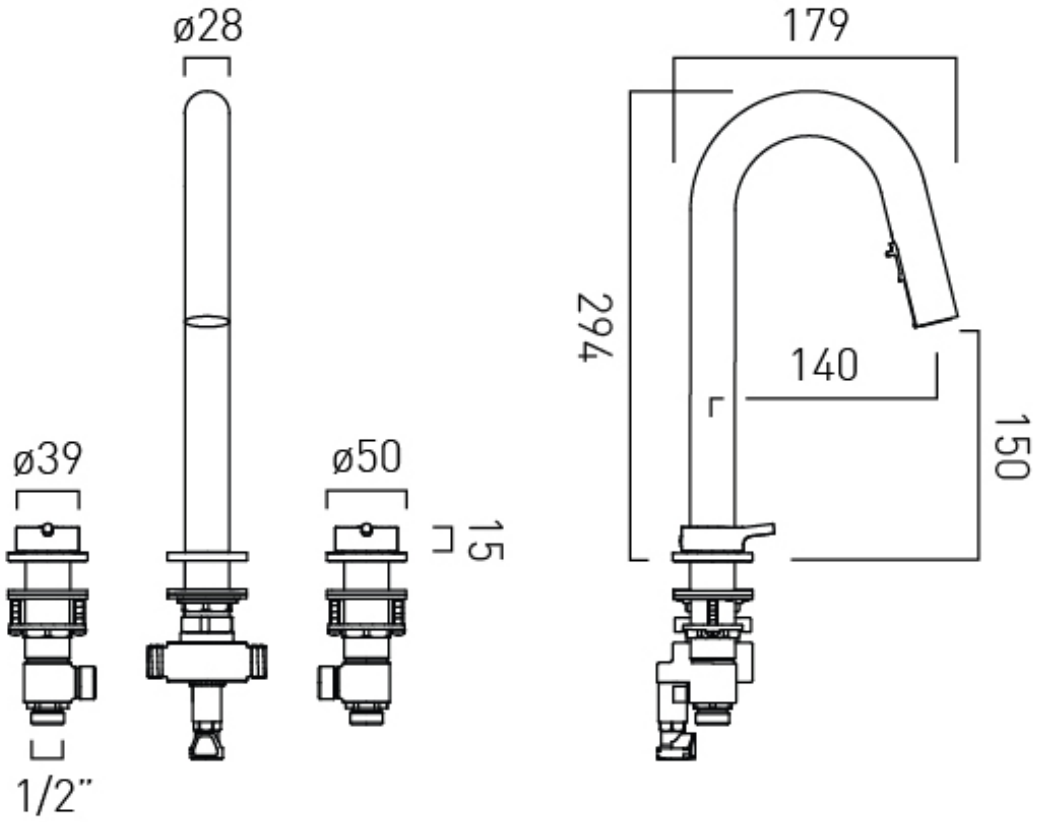

tel: 01934 744466
email: sales@vado.com
www.vado.com

WHERE INSPIRATION FLOWS
TAPS | SHOWERS | FURNITURE

VADO